BOLTON, MASSACHUSETTS

MARCH 2022

Sewer Expansion & WWTF Alternatives Evaluation – Phase 2

Emerson & Florence-Sawyer Schools

WRIGHT-PIERCE
Engineering a Better Environment

Emerson & Florence-Sawyer Schools
Sewer Expansion and WWTF Alternatives Evaluation
Phase 2

Bolton, MA

March 2022

Prepared By:

Wright-Pierce
600 Federal Street, Suite 2151
Andover, MA 01810
978.416.8000 | www.wright-pierce.com

Table of Contents

Section 1 Introduction 1-1
1.1 Background 1-1
1.2 Project Scope 1-3

Section 2 Sewer Expansion Analysis 2-1
2.1 Current Flows and Loads 2-1
2.1.1 Current WWTF Flow Capacity 2-2
2.2 Sewer Expansion 2-3
2.2.1 Estimated Expansion Flows 2-3
2.2.2 Potential Infiltration/Inflow Flow Estimates 2-4
2.3 Estimated Future Discharge Permit Limits and Requirements 2-5

Section 3 WWTF Treatment Alternatives Analysis 3-1
3.1 Membrane Bioreactor (MBR) 3-1
3.1.1 Advantages and Disadvantages 3-3
3.1.2 Operating and Maintenance Costs 3-4
3.1.3 Capital Costs 3-4
3.1.4 Complexity 3-5
3.1.5 Compatibility 3-5
3.2 Amphidrome™ 3-5
3.2.1 Advantages and Disadvantages 3-6
3.2.2 Operating and Maintenance Costs 3-6
3.2.3 Capital Costs 3-7
3.2.4 Complexity 3-7
3.2.5 Compatibility 3-7
3.3 Sequencing Batch Reactor (SBR) 3-8
3.3.1 Advantages and Disadvantages 3-8
3.3.2 Operating and Maintenance Costs 3-9
3.3.3 Capital Costs 3-10
3.3.4 Complexity 3-10
3.3.5 Compatibility 3-10
3.4 Comparison of Alternatives 3-11

Section 4 Conclusions and Recommendations 4-1
4.1 Sewer Expansion 4-1
4.2 WWTF Alternatives 4-2
4.3 Other Considerations 4-2
4.3.1 Sewer Expansion Considerations 4-2
4.3.2 WWTF Considerations 4-2
4.3.3 Funding Considerations 4-3
4.3.4 Additional Effluent Disposal 4-3

List of Appendices

Appendix A Flow Estimation
Appendix B Vendor Literature
Appendix C NPDES Permit

List of Figures

Figure 1-1 WWTF Aerial and Potential Sewer Expansion Area 1-2
Figure 2-1 Maximum Daily Flow per Month, January 2018 – January 2020 2-2
Figure 3-1 MBR System Schematic 3-2
Figure 3-2 Hollow Fiber Membrane Units 3-3
Figure 3-3 Amphidrome™ Schematic 3-6
Figure 3-4 Typical SBR Sequence 3-9

List of Tables

Table 2-1 WWTF Flows and Loads Summary, January 2018 – January 2021 2-1
Table 2-2 Wastewater Flow Estimates – Sewer Expansion Area, Gallons/Day 2-4
Table 2-3 I/I Flow Estimations – Sewer Expansion Area, Gallons/Day 2-5
Table 3-1 MBR Annual Operating and Maintenance Costs 3-4
Table 3-2 MBR Capital Costs 3-5
Table 3-3 Amphidrome™ Annual Operating and Maintenance Costs 3-7
Table 3-4 Amphidrome™ Capital Costs 3-7
Table 3-5 SBR Annual Operating and Maintenance Costs 3-10
Table 3-6 SBR Capital Costs 3-10
Table 3-7 Capital and O&M Cost Summary and Life-Cycle Analysis 3-11
Table 3-8 Comparison of Alternatives 3-11
Table 4-1 Wastewater Flow Estimates – Sewer Expansion Area, Gallons/Day 4-1

WRIGHT-PIERCE
Engineering a Better Environment

1

Section 1 Introduction

1.1 Background

The Town of Bolton contracted with Tata and Howard engineering in 2006/2007 to provide wastewater treatment and disposal for two Town schools and three nearby Town-owned buildings. The wastewater treatment facility (WWTF) is a package membrane bioreactor (MBR) type system that is currently designed and permitted to treat a maximum flow of 38,000-gallons per day. The facility operates under a groundwater discharge permit (GWDP) issued by the Massachusetts Department of Environmental Protection (MassDEP), permit number 0-833. The facility is located on a parcel of land adjacent to the campus of Emerson and Florence-Sawyer schools on Mechanic Street in Bolton. The WWTF can be accessed through the back of the school campus or through a dirt road behind the office buildings off Route 117. The WWTF land parcel also contains a subsurface leaching field for treated effluent disposal. The sewer collection system for the Town-owned buildings consists of septic tank effluent pump (STEP) systems for each building, low-pressure sewer mains that converge at an E-One™ grinder pump station with a low-pressure sewer that discharges at the gravity collection system on the school campus.

The original treatment facility design assumed 9,600 gpd for flow from the schools and under 400 gpd from the Town-owned buildings. The spare capacity for this facility was intended to allow for possible expansion of the facility's service area in the future. The expansion area consists primarily of Main Street in Bolton, bounded by Harvard and Manor Road to the west and ends at 626 Main Street to the east. Portions of the connecting side roads between the bounds are included. Figure 1-1 shows the WWTF site and potential sewer expansion area.

Wright-Pierce was contracted by the Town in early 2021 to perform two evaluations. Phase 1 involved performing the 15-year Engineering Evaluation and summary report as required by the WWTF's groundwater discharge permit (GWDP). This was completed and submitted to MassDEP in June 2021. Flows and loads at the facility were evaluated for the last three years. Between January 2018 and January 2021, the facility treated 2,700 gpd on average. During the summer months, the average daily flow decreases by about 1,300 gpd. This does include a time period when the schools were closed due to COVID-19. The maximum daily flow for the analysis period was 20,700 gpd and the 98th percentile maximum flow was 9,200 gpd.

Phase 2 involves planning for the future at the WWTF, including alternative treatment options and potential adjacent area sewer expansion options.

Figure 1-1 WWTF Aerial and Potential Sewer Expansion Area

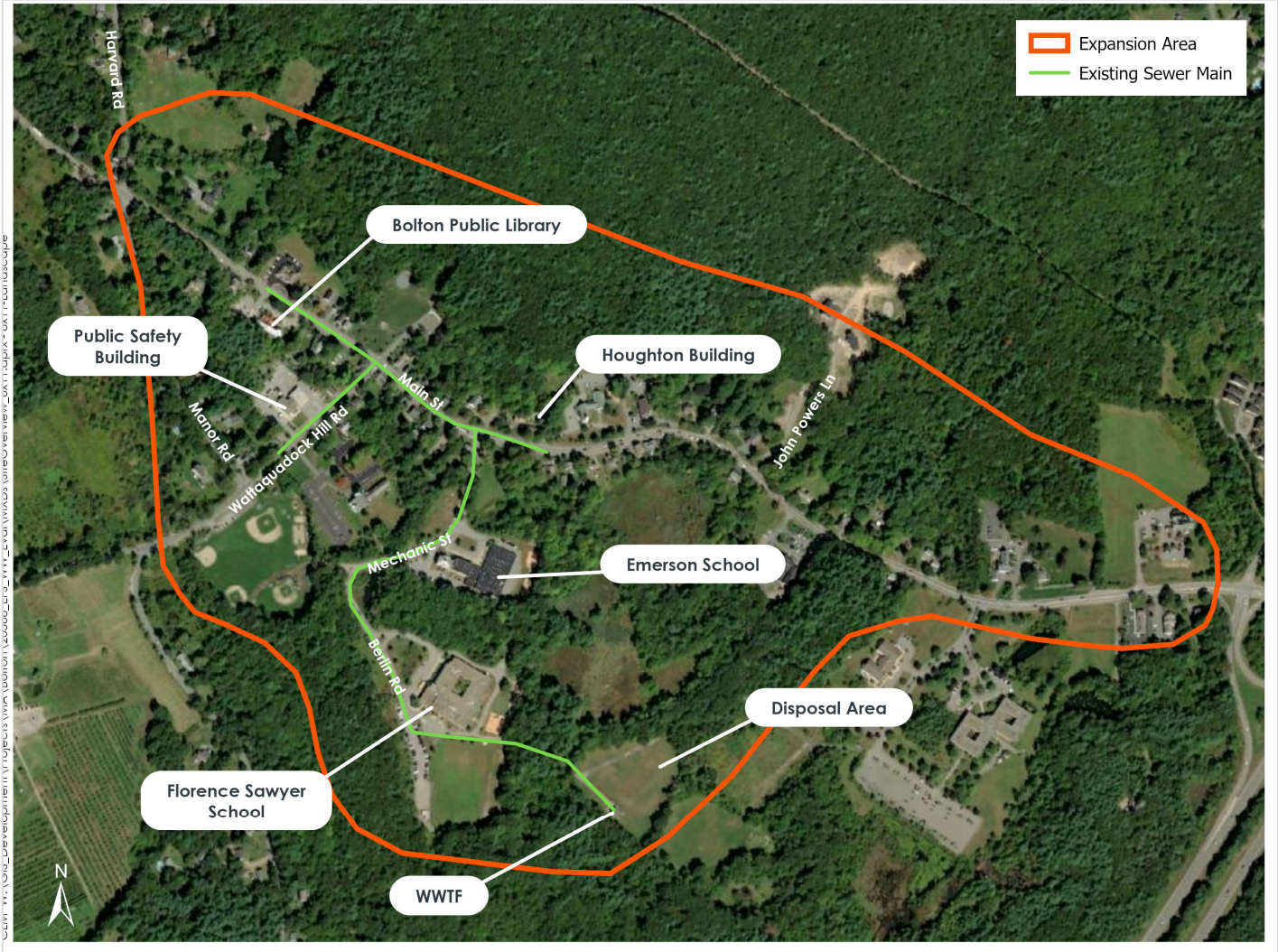

1.2 Project Scope

Phase two includes the evaluation of WWTF treatment alternatives and operational improvements, potential future GWDP limit changes or additions, current available capacity at the WWTF, and long-range planning for potential sewer expansion including resulting flows and loads increases.

Wright-Pierce (WP) performed the following tasks as part of Phase two:

- Reviewed relevant information regarding enrollment of the Town's schools and population trends for the Town of Bolton to plan for the next 20-years.
- Solicited input from the Town regarding expansion plans for the service area of the existing facility. Estimated future flows and loads resulting from expansion.
- Reviewed potential future groundwater discharge standards with MassDEP.
- Reviewed files for the Town of Bolton at MassDEP Central Regional Office in Worcester, MA to gain a deeper understanding of past operations and the conditions of the facility and to obtain historical design and compliance records for use by both WP and the Town of Bolton Department of Public Works.
- Evaluated three treatment alternatives for the WWTF, including replace-in-kind, to treat existing and future flows and loads. The evaluation included capital and operation and maintenance costs considerations over the life of the equipment, compliance with current and potential future discharge limits, complexity of operation, and reliability of operation. The alternatives evaluation considered re-usable space, tankage, and the building.

WRIGHT-PIERCE
Engineering a Better Environment

2

Section 2 Sewer Expansion Analysis

2.1 Current Flows and Loads

The WWTF in Bolton services two public schools, Emerson and Florence-Sawyer, and three municipal buildings - the Public Safety Building, Public Library, and Houghton Building. The criteria outlined in 310 CMR 15.000 (Title 5) was used to estimate flow for the initial design of the WWTF. Ten gallons per day per student was used for a total design flow of 9,600 gpd, and a future flow allowance was allotted to increase flow to 38,000 gpd. WP reviewed the monthly discharge monitoring reports (DMRs) for the analysis period of January 2018 to January 2021 and summarized the historical and current flows and loads in the Phase 1 report.

Table 2-1 provides the same flows and loads summary that was presented in the report for Phase 1.

Table 2-1 WWTF Flows and Loads Summary, January 2018 – January 2021

Parameter	Flow (gpd)	BOD (mg/L)		TSS (mg/L)		Ammonia (mg/L)	TN (mg/L)	Nitrate (mg/L)
		Inf	Eff	Inf	Eff	Inf	Eff	Eff
Average Daily	2,676	-	-	-	-	-	-	-
Minimum Daily	30	-	-	-	-	-	-	-
Maximum Daily	20,700[1]	-	-	-	-	-	-	-
Maximum Daily, 98th Percentile	9,186	-	-	-	-	-	-	-
Average Monthly	2,531	105	4.9	553	3.2	94	7.5	3.4
Minimum Monthly	1,125	16	ND[2]	18	ND[2]	21	0.7	ND[2]
Maximum Monthly	5,779	620	44	6,200	37	190	38	27

Note:

1. Occurred on February 20, 2018
2. Non-detectable, below detectable limit

It is important to note that this data set includes data from the school closure period due to the COVID-19 pandemic (March 2020 – January 2021).

2.1.1 Current WWTF Flow Capacity

MassDEP has an established method to determine the used capacity of a WWTF with a GWDP. The method is separated into two components; the first component consists of the historical treated flow in a 2-year period and the other consists of an unused "build-out" flow for the existing system within that period. The first component is determined by taking the maximum daily flow for each month during a 24-month period and averaging them. The build-out flow for this system would be the maximum number of students for the schools minus the actual number of students enrolled during the analysis period. The 24-month period used for this report was January 1, 2018 to January 30, 2020 to avoid COVID-19 school closures. A summary of the maximum daily flows per month is presented in Figure 2-1.

Figure 2-1 Maximum Daily Flow per Month, January 2018 – January 2020

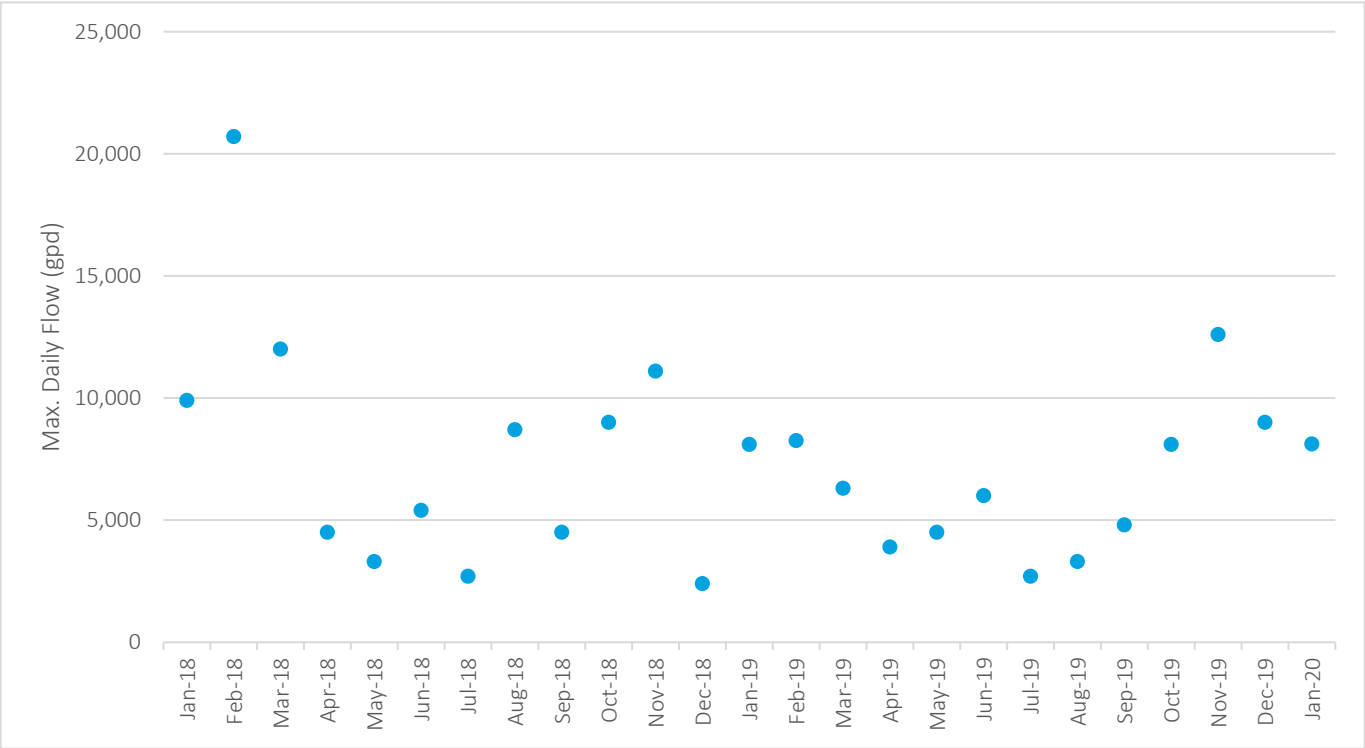

The average maximum daily flow for the analysis period is 7,200 gpd. It appears the flow on February 20, 2018 of 20,700 gpd is an anomaly. If this is removed, the average drops to 6,700 gpd.

To estimate the build-out capacity present at the facility, the enrollment numbers at the schools was evaluated. The original design enrollment for the schools is 960 students, which is treated as the maximum enrollment. The current combined enrollment is 850 students. The build-out capacity represents the difference between the maximum and current school enrollment. The build-out capacity is determined by multiplying the 110 additional students by the rate of 10 gpd/student (per Title 5 guidelines). Hence, the build-out capacity of the facility is estimated to be 1,100 gpd.

Adding the current used capacity and the build-out flow results in a used capacity of 7,800 gpd. Subtracting this value from the maximum effluent disposal capacity of 38,000 gpd results in an unused (available) capacity of approximately 30,200 gpd.

A more conservative approach can also be taken to estimate the available capacity. This was done by taking the estimated flow generated by the schools at maximum enrollment (960 students * 10 gpd/student = 9,600 gpd) and subtracting it from the permitted flow. This approach results in an available capacity of 28,400 gpd. To be conservative, this approach was used for the remainder of the analysis.

2.2 Sewer Expansion

The Town of Bolton wishes to evaluate potentially expanding the sewer service area of the WWTF to include buildings and Town-owned facilities within the nearby area on Main Street and several connecting streets. The buildings include residential, commercial, and institutional buildings and Town-owned property. These properties are located along five streets; Main Street, Wattaquadoc Hill Road, John Powers Lane, Manor Road, and Harvard Road. The majority of properties are on Main Street and are Residential. Refer to Figure 1-1 for an aerial map of the potential sewer expansion area and existing sewer system. Appendix A contains a breakdown of the list of properties.

2.2.1 Estimated Expansion Flows

The potential expansion area was divided into individual parcels and categorized by use-type (residential, commercial, institutional, and town-owned) to estimate the wastewater flow associated with each parcel. All flow estimates were made according to MassDEP guidelines (used Title 5 flow unit flow estimates).

Title 5 flow estimates for residential properties are estimated at 110 gpd per bedroom. The residential parcels consisted of 45 single-family homes and 7 multi-family homes.

The commercial parcels consist of one small retail/service store, four general office areas, one bank, two dentist offices, and one veterinary office. Per Title 5 flow estimate guidelines, retail stores are estimated at 50 gpd per 1,000-squre feet of commercial space, banks and general office areas are estimated at 75 gpd/1,000-square feet, dentist offices are estimated at 200 gpd per dentist, and veterinary offices are estimated at 250 gpd per doctor.

The institutional parcels consist of two churches, one rectory, and one senior housing complex. Title 5 flow estimates for churches are 6 gpd per seat. The rectory and senior housing complex are considered institutional; however, their flow contribution was estimated with the Title 5 residential guideline of 110 gpd/bedroom. The rectory houses two bedrooms, and the senior housing complex has 28 bedrooms.

The Town-owned parcels consist of the Bolton Historical Society, three recreational parks, one baseball field, and conservation land adjacent to John Powers Lane. The Bolton Historical Society's flow is estimated according to Title 5 commercial office space guidelines at 75 gpd/1,000-square foot; the baseball field is estimated at 5 gpd per person; and the parks do not have public water use and are therefore estimated to have no wastewater contribution.

The flow estimates for the potential sewer expansion area are summarized in Table 2-2 below. The full breakdown can be found in Appendix A.

Table 2-2 Wastewater Flow Estimates – Sewer Expansion Area, Gallons/Day

Use-Type1	Main Street	Wattaquadoc Hill Road	John Powers Lane	Manor Road	Harvard Road	Total
Residential	14,000	1,100	1,900	3,300	600	20,900
Commercial	3,400	-	-	-	-	3,400
Institutional	3,600	500	-	-	-	4,100
Town-owned	200	100	-	-	-	300
TOTAL	21,200	1,700	1,900	3,300	600	28,700

2.2.2 Potential Infiltration/Inflow Flow Estimates

In addition to wastewater flow from properties, infiltration and inflow (I/I) must be taken into account for the collection system required to expand the existing sewer service area. This is true for conventional gravity collection systems as I/I comes from groundwater and stormwater that enters the underground piping and manholes through cracks and holes, pipe joints, or direct entry through manholes. The Town-owned buildings that are already connected to the sewer system use a Low-Pressure Sewer (LPS) system to transport their wastewater to the WWTF. LPS systems use smaller diameter pipes and grinder pumps designed to reduce the size of solids entering the WWTF. The force mains used for LPS systems are typically made from high density polyethylene (HDPE) or pressure rated PVC. HDPE pipes have a reduced number of joints because the segments are welded together and traditional manholes are not required as it is pressure pipe, therefore only minimal I/I can typically enter into a LPS system. If a LPS were to be used throughout the sewer expansion area, it is reasonable to assume that there would be minimal additional I/I flow that would enter the sewer system.

In the case of a conventional gravity collection system to estimate I/I, the total length of sewer pipe that would be required for the sewer expansion was estimated through the Town's GIS webpage and I/I flow for the system was estimated according to TR-16 guidelines of 250-500 gallons per day per inch-diameter mile (gpd/idm) for new pipe. The pipe lengths were estimated based on the lengths of each road segment within the limits of the expansion area, and the diameter of the pipes was determined based on the expected flow each pipe segment would receive, at a conservative minimum slope of pipe. In general, for pipes with less than 0.5 million gallons per day (MGD) of flow, an 8-inch diameter pipe is used. The pipe lengths and diameters are summarized below in Table 2-3 along with the low and high range of I/I flow estimates.

The flow through each pipe segment was taken as the summation of the flow produced by each parcel adjacent to that pipe segment's roadway and any branching sewer segments that flow into it. For example, the pipe segment along Manor Road would have flow from the parcels that front Manor Road but would not have additional flow from a branch road. This also applies for Wattaquadoc Hill Road, John Powers Lane, and Harvard Road. Main Street would service flow from parcels adjacent to Main Street and the flow from the branch roads off Main Street. With all flows considered, including I/I, each pipe segment was estimated to be 8-inches in diameter.

Table 2-3 I/I Flow Estimations – Sewer Expansion Area, Gallons/Day

Street	Pipe Length, miles	Pipe Size, inches	I/I High[1], gpd	I/I Low[1], gpd
Main Street	1.1	8	4,400	2,200
Wattaquadoc Hill Road	0.2	8	800	400
John Powers Lane	0.2	8	800	400
Manor Road	0.3	8	1,200	600
Harvard Road	0.6	8	2,400	1,200
TOTAL	2.4	-	9,600	4,800

Note:

1. High - 500 gpd/idm and Low - 250 gpd/idm

We understand it is the Town's desire to mimic the existing collection system and plan to use a LPS for the sewer expansion area. As such, the I/I estimations in Table 2-3 wouldn't be required as noted above. A reserve inflow will be used to account for the potential of illicit sump pump connections at each property not owned by the Town. A flow of 1,000 gpd is assumed as the potential flow contribution for inflow to the sewer expansion area. During construction of the expansion area sewer system, a program should be instituted to educate homeowners that sump pumps should not be connected to the sewer system.

Based on the analysis above, a total wastewater flow of 29,700 gpd is estimated for the sewer expansion area. This is a conservative estimate. The existing WWTF has 28,400 (conservative approach) of available capacity as previously noted. It appears the sewer expansion area flow could be handled by the existing WWTF and effluent disposal system, but it would require input from MassDEP during the design and permitting of the expansion. A sewer expansion would require a permit modification and approval by MassDEP. The new LPS system would connect into the existing LPS system on Main Street and Mechanic Street.

2.3 Estimated Future Discharge Permit Limits and Requirements

Part of the purpose of this evaluation is to plan for a 20-year period into the future and how that might affect the WWTF for both flows and loads and treatment efficiency. To determine the extent of future impacts, it must first be understood what the discharge requirements will be during that planning period. The GWDP for the facility is issued and managed by the MassDEP Central Regional Office (CERO). Currently, the point of contact within DEP CERO is David Boyer. Wright-Pierce interviewed Mr. Boyer to get his input on what the WWTF could expect for new or changing limits in the next few cycles of GWDP renewals (every 5 years). Mr. Boyer reported that it is unlikely that the GWDP limits will change for this WWTF. The discussion will need to be revisited if the Town moves forward to expand its sewer service area. One potential item that could impact whether the permit changes is proximity to well protection areas, such as Zone I or II or Interim Wellhead Protection Areas. There are several interim wellhead protection areas in the near vicinity to the leaching field but currently the leach field is not located within one. The recent final permit received in September 2021 had very few changes to the prior 2016 permit and did not have any effluent discharge limit changes.

WRIGHT-PIERCE
Engineering a Better Environment

3

Section 3 WWTF Treatment Alternatives Analysis

This section of the report summarizes the evaluation of treatment alternatives available to the Bolton WWTF. This section presents a description of the alternatives evaluated, pros and cons of each alternative, high-level planning capital costs, annual operation and maintenance (O&M) costs, life-cycle costs, conceptual site layouts, and grading of the alternatives evaluated. The systems are designed for the permitted capacity of 38,000 gpd in all cases. Based on the analysis in Section 2, it appears the sewer expansion area could be incorporated within the existing permitted flow. The conservative approach was slightly higher than the existing permit. It should be noted that an increase over the permitted flow limit would require approval by MassDEP and the existing disposal field would need to prove it has capacity or additional disposal area would need to be permitted, designed, and constructed. It is also important to note that MassDEP Small WWTF Guidelines have a requirement for treatment redundancy for flows of 50,000 gpd and higher.

Three potential treatment alternatives were considered for this WWTF. The alternatives include an updated Membrane Bioreactor (MBR) (in-kind replacement and a separate manufacturer), Amphidrome™, and a Sequencing Batch Reactor (SBR). These alternatives are standard treatment types for small WWTFs with GWDPs. These systems can also utilize existing infrastructure in parts or all of their design. The new MBR system assumes complete equipment replacement but the existing structures would not be changed. The comparison between alternatives includes capital costs for the equipment and structures, annual operation and maintenance costs, compatibility with existing systems, and ease of operation.

Operating costs for a WWTF are defined as costs incurred to run the system. This includes electrical power for equipment, chemicals required by the treatment systems, sludge removal required by the system, and operator hours required to run the system. Maintenance costs are defined as costs incurred to maintain the system. This includes part replacement costs and hours required to maintain the system and equipment. The costs are expressed as a yearly average, which in some cases involves annualizing a cost, such as a replacement part that is only required every 10 years.

Capital cost estimating for this analysis are not total project costs. The capital costs are derived from manufacturer proposals on their equipment and tankage required, only. These costs are planning level and for comparison from one alternative to another. Appendix B contains the manufacturer proposals.

3.1 Membrane Bioreactor (MBR)

MBR wastewater treatment systems utilize a combination of the conventional activated sludge treatment process and advanced filtration with membrane units. MBRs are being used with more frequency for small wastewater treatment facilities. When operated correctly, MBRs are capable of producing a very high-quality effluent that can be used for reuse applications. The existing WWTF in Bolton utilizes MBR technology for treatment.

MBR systems utilize a bioreactor and a membrane unit as shown in Figure 3-1. MBRs are typically preceded by pretreatment, screening, and flow equalization and may be supplemented with disinfection. The bioreactor consists of several baffled zones or even separate tanks that make up the activated sludge process, which typically uses aerobic suspended growth to separate treated wastewater from the suspended solids (active biomass). The treated effluent is drawn through the membrane by a vacuum, filtering out the suspended solids. The membranes are essentially microfilters that come in two main designs, flat-plate, and hollow-fiber, which is shown in Figure 3-2.

The membrane microfiltration units can be immersed within the bioreactor or located in a separate unit. When they are located in a separate unit, the separated suspended solids are recirculated into the bioreactor. The membrane units are continuously scoured with air bubbles to prevent membrane clogging and fouling.

MBR systems have the advantage of producing a very high-quality effluent without the need for several additional processes. This allows them to have a relatively small facility footprint that can be a combination of above and below grade components. The effluent quality is such that it can and has been used for wastewater reuse applications. MBRs can also be installed as a phased process where additional membrane modules can be added to the process as flows and loads dictate. However, MBRs typically include higher capital costs due to more equipment and a larger building to house the membrane skid being required, potential high cost of membrane replacement, and higher energy costs.

Figure 3-1 MBR System Schematic

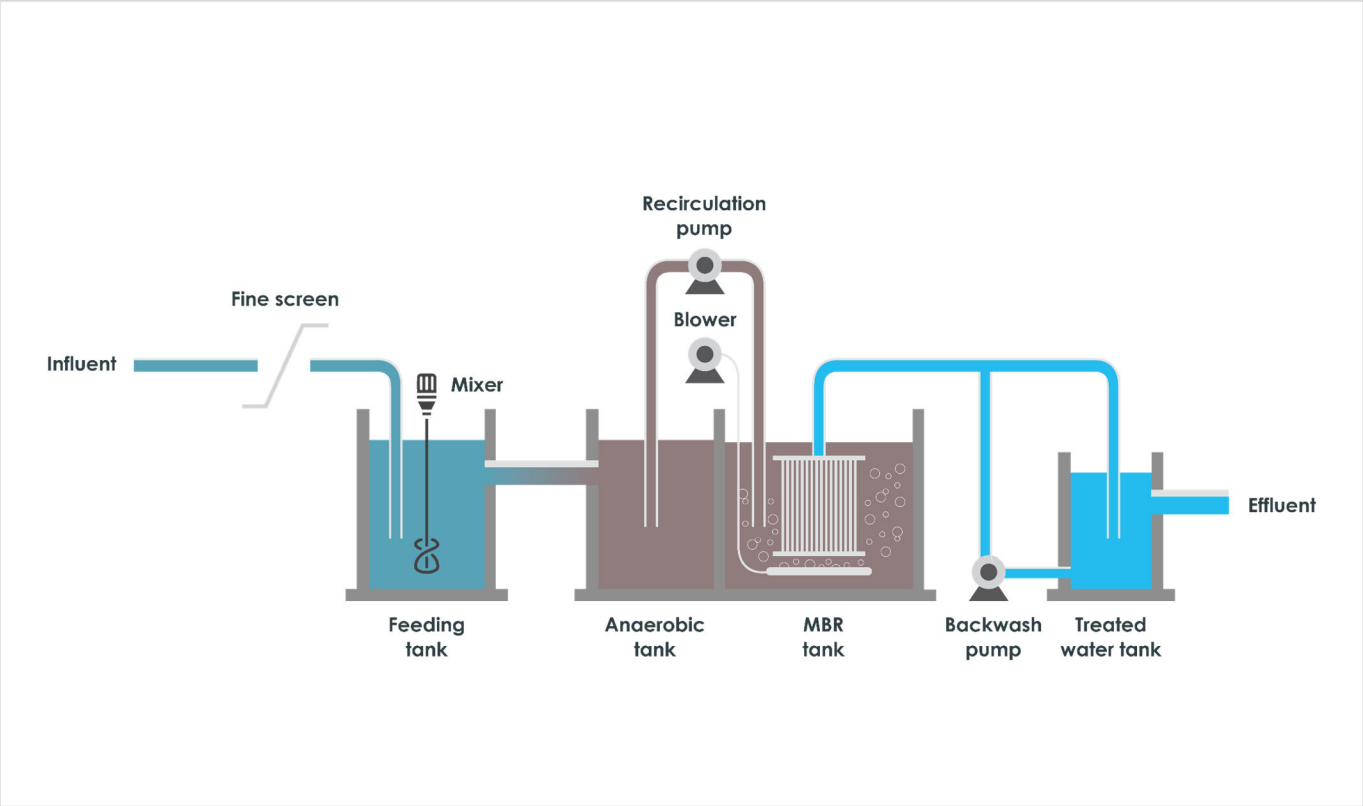

Figure 3-2 Hollow Fiber Membrane Units

3.1.1 Advantages and Disadvantages

MBR systems are known to effectively produce high-quality effluent wastewater while taking up less space than other standard activated sludge processes. The sludge produced by MBRs contains less water than other processes. The WWTF currently uses an MBR system which is a major advantage. This is because the design practices have not significantly changed in the last 15 years and the existing tankage could be re-used. The equipment requirements also have not changed significantly, meaning the electrical systems would not need to be significantly modified. Continuing with the same treatment system is also beneficial for the plant operators since they will be familiar with equipment process and they will not need to learn how to operate and maintain a new type of system. Some of the disadvantages of an MBR include their operating complexity and higher operating costs compared to other systems. MBRs typically have similar energy costs, more chemical usage, similar equipment maintenance and parts replacement requirements, but the membranes are a costly replacement item.

This report summarizes two options for MBR replacement, an in-kind replacement by the existing vendor (Suez) and evaluating a similar design by a different manufacturer (Kubota).

3.1.2 Operating and Maintenance Costs

The overall system design for both manufacturers includes flow equalization, two biological treatment trains each with a pre-anoxic basin, aeration basin, and post-anoxic basin followed by a membrane tank. Each system contains similar equipment for pumping, mixing, and aeration. As a result of the similar designs, it is assumed that chemical usage, sludge removal, maintenance, and labor are equal between the systems. The difference in O&M costs for this equipment is electrical consumption. Electrical consumption estimations were provided by each manufacturer for a flow of 38,000 gpd.

The yearly power usage for the Kubota system is approximately 99,600 kW-hr/year and the yearly power usage for the Suez system is approximately 37,200 kW-hr/year as provided by the manufacturers.

The annual operating costs for both systems are summarized in Table 3-1.

Table 3-1 MBR Annual Operating and Maintenance Costs

Parameter	Suez	Kubota
Electrical Consumption	$5,600	$14,900
Chemical Usage	$1,000	$1,000
Sludge Removal	$22,000	$22,000
Maintenance	$1,200	$1,200
Labor	$22,500	$22,500
Total	$52,300	$61,600

The Kubota system costs approximately $9,000 more to run annually than the Suez treatment system.

3.1.3 Capital Costs

The estimated capital cost comparison for this analysis includes equipment and structures, only. In order to directly compare the manufacturer's proposals, it must be understood what each proposal included, didn't include, and re-used from existing infrastructure. The proposal from Suez includes re-using all tankage and included a full replacement to all equipment, including the membrane skid and control system. The proposal from Kubota includes re-using all existing tankage, the same equipment as Suez with the addition of sludge pumps. The Kubota proposal does not include VFDs for the equipment, an additional membrane feed tank identified by the manufacturer as being required, or a sludge holding tank. As the existing system doesn't include a sludge holding tank, but it is recommended to be added, the cost is a wash between the two manufacturers. Based on required sizing, a cost was estimated for the membrane feed tank required by Kubota and for the VFDs.

The capital costs for both proposals are summarized in Table 3 2.

Table 3-2 MBR Capital Costs

Parameter	Suez	Kubota
Capital Costs	$798,800	$846,200

Due to the additional tank required by Kubota, the capital cost of the upgrade is approximately $50,000 higher than Suez.

3.1.4 Complexity

A key criterion to review when completing an alternatives analysis for treatment methods is to look at how complicated and/or complex a method is compared to the others. Complexity can be defined as more equipment, additional processes, difficult to operate and/or difficult to control. For this analysis, the MBR treatment system is the most complex. The MBR system has the most equipment, requires careful process control with possible supplemental carbon addition that will not be done automatically, chemical cleaning of the membranes, and more instrumentation to monitor than the other methods.

3.1.5 Compatibility

For this analysis, compatibility is defined as how well the new system can re-use existing infrastructure, including tanks, the WWTF building, and the existing electrical infrastructure. As the current system is an MBR system, and the designs have not significantly changed, the existing infrastructure would be able to be completely re-used with little to no modifications, making it the most compatible alternative.

3.2 Amphidrome™

As shown in Figure 3-3, the Amphidrome™ system is a submerged, attached-growth treatment system. It is very similar to the MBR system except the aerated portion of the bioreactor is replaced with the Amphidrome™ tank and the membranes are replaced with the AmphidromePlus™ tank. The treatment process consists of an anoxic equalization tank, the Amphidrome™ reactor and sand filter, and clear well. Effluent from the anoxic tank flows downward through the sand filter, providing contact with the bacterial population adhering to the sand particles, and then flows into a clear well. From the clear well, the wastewater can be mixed with a supplemental carbon source and pumped through a second sand filter (included in the Amphidrome™ Plus process) for increased nitrogen removal. Liquid from the clear well is pumped back through the Amphidrome™ reactor/sand filter to backwash the filter and return liquid to the anoxic tank. After a series of cycles, the effluent is sent to a disposal field.

Figure 3-3 Amphidrome™ Schematic

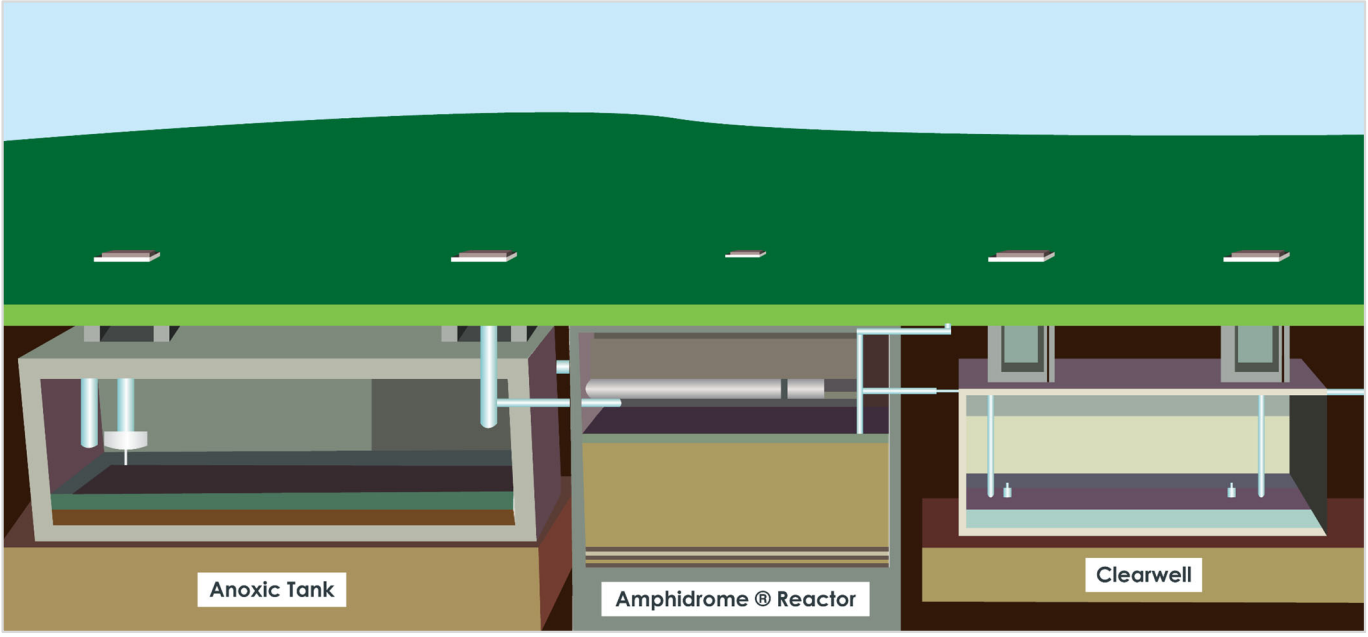

3.2.1 Advantages and Disadvantages

Some advantages that are provided with the Amphidrome™ system include low visual and audible site impacts due to all tanks being below grade and all blowers being enclosed. The system is simple to operate with equipment operator screens similar to SCADA that allow for remote access for monitoring and controlling the system. Amphidrome™ also provides consistent treatment while being energy efficient and having low chemical costs. The system is also easily upgradable for phosphorus treatment. No additional filtration equipment would be needed for phosphorus removal. Some of the disadvantages of an Amphidrome™ system include the need for additional tankage and intermediate pumping steps.

3.2.2 Operating and Maintenance Costs

The Amphidrome™ system includes equalization/anoxic tankage, Amphidrome™ reactor tanks, intermediate clear well, Amphidrome Plus™ tank, and final clear well. The chemicals that are needed for this system include alkalinity and a supplemental carbon source. Equipment needs for this process are similar to an MBR, pumps and mixers in the anoxic tank, blowers for aeration, intermediate and final pumping, and chemical feed systems. The manufacturer's proposal indicated sludge removal would be necessary for this process and a holding tank would likely be required (could repurpose an existing tank). Annual electric costs are comparable to an MBR system, but chemical costs are likely to be higher.

The annual operating costs for the Amphidrome™ system are summarized in Table 3-3.

Table 3-3 Amphidrome™ Annual Operating and Maintenance Costs

Parameter	Amphidrome
Electrical Consumption	$7,300
Chemical Usage	$6,000
Sludge Removal	$22,200
Maintenance	$4,800
Labor	$22,500
Total	$62,800

3.2.3 Capital Costs

The proposal for capital costs for the Amphidrome™ system include equipment, tank internals, controls, VFDs, re-use of the FET, bioreactors and clearwell, but does not include concrete tanks for the two Amphidrome™ and one AmphidromePlus™ tanks. A cost is estimated for the omitted tankage based on dimensions required from the vendor. The cost is summarized in Table 3-64.

Table 3-4 Amphidrome™ Capital Costs

	Amphidrome™
Capital Cost	$670,200

3.2.4 Complexity

The Amphidrome™ system is comparable to the MBR system in terms of complexity. The equipment and process are very similar, along with the controls, chemical needs, and level of difficulty to maintain and operate the system. The below ground, in-tank sand filter is more difficult to operate than the membrane filter. Additional intermediate pumping and more frequent sludge removal is required for the Amphidrome™ system.

3.2.5 Compatibility

The Amphidrome™ system would re-purpose some of the existing tankage at the WWTF. The existing flow equalization tank and two aerobic tanks would be re-purposed into anoxic volume for the new treatment system, and the final effluent chamber would be re-purposed into one of the Amphidrome™ clear wells. The alkalinity feed system and blowers could be installed within the existing building. Three new tanks would need to be installed, two Amphidrome™ reactors and one Amphidrome Plus™ reactor. It makes the most sense to construct a new FET next to the existing tank for anoxic volume, repurpose the aeration tanks as clearwells, and install the Amphidrome™ tanks next to them. There appears to be available space to accommodate the new tanks. Many piping modifications and some new pipe construction would be required to install this system. The existing building would be able to be repurposed and the existing electrical feed would be adequate for the new equipment.

3.3 Sequencing Batch Reactor (SBR)

The sequencing batch reactor (SBR) wastewater treatment system is a modified activated sludge treatment process that utilizes a batch treatment cycle to perform the necessary steps for wastewater treatment. SBRs minimize the facility footprint by combining multiple treatment processes into one tank, thereby reducing the capital cost. The process incorporates the introduction of wastewater to a reactor, providing time for the necessary reactions to occur, and sequentially discharging a volume of treated effluent that is essentially equal to the original volume of influent. An SBR is a well-established treatment process that is capable of producing a high-quality effluent, while operating over a wide range of hydraulic and organic loadings.

The SBR process typically operates as a five step "fill and draw" system, which is carried out in sequential order within a specific time period as shown in Figure 3-4. The steps are as follows:

1. Mix/Fill - to add preliminary treated wastewater to the reactor (under mixing)
2. React- to complete reactions initiated during Fill (under aeration)
3. Settle - to allow solids separation to occur (no aeration or mixing)
4. Decant - to remove treated and clarified wastewater from the top of reactor tank (no aeration or mixing)
5. Sludge Wasting/Idle - to remove excess sludge from the reactor tank bottom (no mixing or aeration)

In a two-tank system (which is standard practice for SBRs), the general principal is to have one reactor continue to receive the influent flow while the other reactor proceeds through the React, Settle, Decant, and Sludge Wasting stages. SBRs have recently become highly automated, with the prevalent use of reliable Programmable Logic Controllers (PLCs), making the systems much more practical for use in small systems.

3.3.1 Advantages and Disadvantages

There are several advantages that come with a sequencing batch reactor system. In new construction, these systems require less space and have less associated equipment and chemical requirements than other treatment systems. Due to the batch nature of the system, they are typically able to handle volatile swings in influent flows and loads better than other treatment systems. These systems are able to adapt well to different influent flows and work well with automated controls. Disadvantages of a SBR system include the necessity for a deeper tank than other treatment systems since all treatment occurs in one tank. Specific to Bolton, disadvantages include the inability to re-use much of the existing infrastructure as the tanks do not have the proper volume required by the SBR manufacturer.

Figure 3-4 Typical SBR Sequence

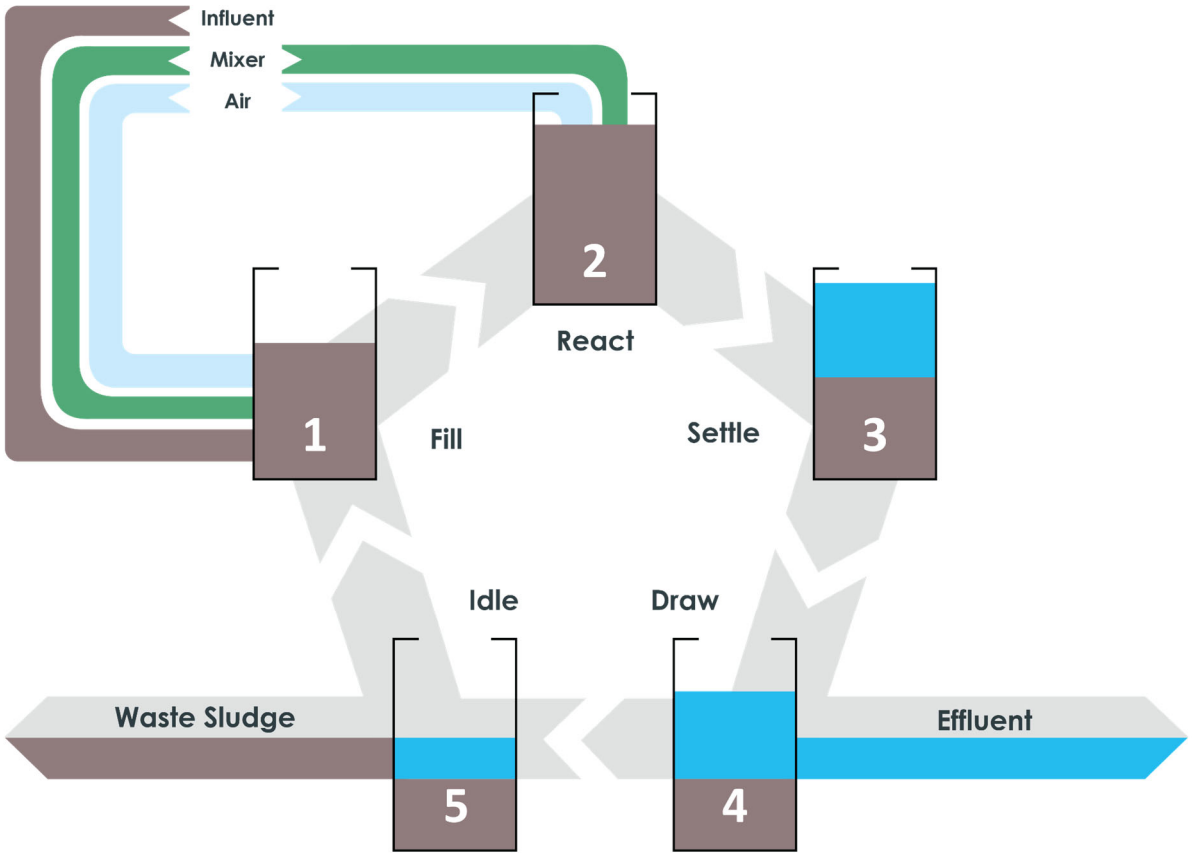

3.3.2 Operating and Maintenance Costs

This report discusses two possible vendors for a sequencing batch reactor system, an Omniflo® SBR provided by EVOQUA and an AquaSBR® SBR provided by Aqua-Aerobic Systems, Inc. The system designs differ significantly from one to the other.

The Evoqua system consists of steel tanks, a jet mixing system with blowers, and a separate decanting system. The Aqua-Aerobic system consists of concrete tanks and combination aerator, mixer, decanter equipment (no blowers). The SBR system relies on sludge removal to keep the system operating properly, which would require a storage tank and pumps. There are no chemical needs for the SBR system.

Due to the difference in designs, the electrical usage for the systems is very different. The Aqua-Aerobic system is double that of the Evoqua system. In addition, due to the equipment design differences, replacement costs are far less for the Evoqua system.

When comparing to the Amphidrome™ and MBR systems, the sludge for the SBR system is much thinner, which will require more frequent removal and trucking resulting in a higher annual cost.

The operating costs for the two variations of a SBR system are summarized in Table 3-5.

Table 3-5 SBR Annual Operating and Maintenance Costs

Parameter	Evoqua	Aqua-Aerobic
Electrical Consumption	$11,000	$21,900
Chemical Usage	-	-
Sludge Removal	$70,000	$70,000
Maintenance	$1,300	$500
Labor	$22,900	$22,900
Total	$105,200	$115,300

3.3.3 Capital Costs

The capital costs for the Evoqua system includes the equipment, tanks, and controls and plans to re-use the FET, effluent chamber, and one bioreactor for sludge storage. The Aqua-Aerobic system includes the equipment and controls, does not include the two concrete SBR tanks, and plans to re-use the FET, effluent chamber, and one bioreactor for sludge holding. An estimate has been included for the concrete SBR tanks based on the manufacturer provided dimensions.

The capital cost for the two SBR systems are shown in Table 3-6.

Table 3-6 SBR Capital Costs

	Evoqua	Aqua-Aerobic
Capital Costs	$800,000	$669,100

Due to the difference in design, the Evoqua system is significantly more expensive, $130,000. This is due to the requirement of separate blowers and decanters as compared to the Aqua-Aerobic all-in-one mixer-aerator-decanter equipment.

3.3.4 Complexity

The SBR system is very simple to operate, especially when compared to the other two treatment alternatives. The system includes less equipment, no requirement for chemical addition, and can be heavily automated through instrumentation and controls.

3.3.5 Compatibility

The SBR systems are the least compatible with the existing system at the WWTF. They are able to re-use some tankage but for the most part, the SBR tanks are new due to their required volume. There is room available onsite to construct the new tanks, but it would expand the footprint of the existing site to accommodate the required space.

3.4 Comparison of Treatment Alternatives

To compare the treatment alternatives, a weighted scale was used for the criteria. The lower the number, the more favorable the parameter/alternative. Table 3-7 includes the summary of capital and O&M costs for each alternative and a 20-year life-cycle cost. A summation is used to identify the best solution for the alternatives. The comparison is summarized in Table 3-8.

Table 3-7 Capital and O&M Cost Summary and Life-Cycle Analysis

Parameters	MBR		Amphidrome™	SBR	
	Suez (in-kind)	Kubota		Evoqua	Aqua-Aerobics
Capital Cost	$798,800	$846,200	$670,200	$800,000	$669,100
Annual O&M Cost	$52,300	$61,600	$62,800	$105,200	$115,300
Present Worth O&M[1]	$815,000	$960,000	$979,000	$1,640,000	$1,797,000
Life-Cycle Cost	$1,613,800	$1,806,200	$1,649,200	$2,440,000	$2,466,100

1. 20-years, 2.5% interest rate

Each treatment alternative includes 20-year life cycles for equipment, so the replacement schedule is very similar between alternatives. The only difference is the membranes in the MBR alternatives would be replaced twice in the 20-year cycle. The main difference in the life cycle of the alternatives is the annual O&M cost.

Table 3-8 Comparison of Alternatives

Parameters	MBR		Amphidrome™	SBR	
	Suez (in-kind)	Kubota		Evoqua	Aqua-Aerobics
Capital Cost	2	3	1	2	1
Annual O&M Cost	1	2	2	3	4
Complexity	3	3	2	1	1
Compatibility	1	1	2	3	3
Total	7	9	7	9	9

Based on the above, replacing the system in-kind with an MBR treatment system by Suez or installing a new Amphidrome™ system are the best fit for the Bolton WWTF. The capital cost of the Amphidrome™ system is less than the MBR system, but the annual O&M difference of $10,000 results in a lower life-cycle cost of the MBR system. In addition, considering the existing infrastructure is already in place, and that the facility operators are familiar with the Suez MBR technology, it is recommended to continue with that system. The Phase 1 report discusses recommendations and upgrade projects with detailed cost estimates for the existing system. The new GWDP received in September 2021 is included in Appendix C.

WRIGHT-PIERCE
Engineering a Better Environment

4

Section 4 Conclusions and Recommendations

4.1 Sewer Expansion

MassDEP has an established method to determine the used capacity of a WWTF with a GWDP. The method is separated into two components; the first component consists of the historical treated flow in a 2-year period and the other consists of an unused "build-out" flow for the existing system within that period. The 24-month period used for this report was January 1, 2018 to January 30, 2020, to avoid COVID-19 school closures. The average maximum daily flow for the analysis period is 7,200 gpd. It appears the flow on February 20, 2018 of 20,700 gpd is an anomaly. If this is removed, the average drops to 6,700 gpd. The build-out capacity of the facility is estimated to be 1,100 gpd based on current student enrollment versus maximum enrollment. Adding the current used capacity and the build-out flow results in a used capacity of 7,800 gpd. This results in an available capacity of 30,200 gpd.

A more conservative approach was taken to estimate the available capacity. This was done by taking the estimated flow generated by the schools at maximum enrollment (960 students * 10 gpd/student = 9,600 gpd) and subtracting it from the permitted flow. This approach results in an available capacity of 28,400 gpd.

The flow estimates for the potential sewer expansion area is summarized in Table 4-1 below. The full breakdown can be found in Appendix A.

Table 4-1 Wastewater Flow Estimates – Sewer Expansion Area, Gallons/Day

Use-Type 1	Main Street	Wattaquadoc Hill Road	John Powers Lane	Manor Road	Harvard Road	Total
Residential	14,000	1,100	1,900	3,300	600	20,900
Commercial	3,400	-	-	-	-	3,400
Institutional	3,600	500	-	-	-	4,100
Town-owned	200	100	-	-	-	300
TOTAL	21,200	1,700	1,900	3,300	600	28,700

An allowance of 1,000 gpd for inflow was added to the base wastewater flow for the expansion area. Based on the analysis above, a total wastewater flow of 29,700 gpd (28,700 plus 1,000 gpd) is estimated for the sewer expansion area. This is a conservative estimate. The existing WWTF has 28,400 (conservative approach) of available capacity as noted above. It appears the sewer expansion area as currently envisioned by the Town could be implemented, but it would require "early" input from MassDEP prior to proceeding with permitting and design of the proposed expansion. The proposed sewer expansion area could also be scaled back by the Town to stay within the current permitted flow. Any sewer expansion would require a permit modification and approval by MassDEP. The permitting would involve a modification of the GWDP with plan approval and a BRP WP 11 application. The application would require design plans of the sewer collection system to be included. MassDEP has suggested implementing the sewer expansion in phases to review actual flows versus design values to ensure the permit is not exceeded and the treatment facility remains operational and within permitted treatment limits.

4.2 WWTF Alternatives

A weighted scale was used for comparing the treatment alternatives presented in Section 3. Based on the analysis, replacing the system in-kind with an MBR treatment system by Suez or installing a new Amphidrome™ system are the best fit for the Bolton Schools WWTF. The capital cost of the Amphidrome™ system is less than the MBR system, but the annual O&M difference of $10,000 would lead to a lower life-cycle cost of the MBR system. In addition, considering the existing infrastructure is already in place, and that the operators are familiar with the Suez MBR technology, it is recommended to stay with that system. The Phase 1 report discusses recommendations and upgrade projects with detailed cost estimates for this system.

4.3 Other Considerations

There are several other important considerations when planning a sewer expansion for the Bolton WWTF. The considerations involve the design, operation and maintenance, and ownership of the conveyance system from each new connected property, impacts of increased flows to the WWTF, impacts of increased load to the WWTF, and how the project would be paid for and how the new users would be charged for municipal sewer service. In addition, the potential sewer expansion area flow estimates are bordering on the permitted capacity of the WWTF, and additional effluent disposal system area and an increase in permitted capacity could be necessary in the future, should the Town wish to expand the service area further.

4.3.1 Sewer Expansion Considerations

Based on conversations with the Town, it is likely that a low-pressure sewer system will be the desired method for wastewater conveyance for the new expansion area and connection to the existing system. There are two primary options for the low-pressure sewer system - continuing with the septic tank effluent pumping (STEP) type system at each property/building, or going with grinder-type pump stations. In either case, each property/building would be required to install a new pumping system, which must be operated and maintained, and also requires provisions for back-up power or provisions for wastewater storage during prolonged power outages. A key consideration is who would be responsible for owning, operating and maintaining the pumping systems. Municipalities have taken different approaches, including complete homeowner responsibility, a split between homeowner and municipality, or complete municipality responsibility of these systems. Another consideration is how a STEP system versus a grinder pump system would impact the collection system and the WWTF. STEP systems help reduce influent load to the WWTF as some solids and debris are settled out within the septic tank (that ultimately need to be pumped out by a septic hauler). Grinder pump stations do not reduce load as the solids are ground and pumped out with the effluent wastewater and conveyed to the WWTF.

4.3.2 WWTF Considerations

The sewer expansion area will increase operation and maintenance (O&M) costs at the WWTF. At the very least, additional flow will require increased pumping and aeration (blower usage) at the facility. If grinder pump stations were utilized, an even higher increase in O&M costs could be realized due to an increased load associated with the additional solids (and debris) conveyed to the WWTF. The additional load would increase chemical usage, power consumption (more than just that required for the higher flow), and sludge disposal.

In addition to higher O&M costs, additional flow from the sewer expansion area will increase solids handling at the WWTF. If grinder pump stations are utilized, the solids handling would be higher than STEP systems. The increased solids handling could drive the need for an additional (buried) tank to be constructed for solids storage. The solids in the storage tank would need to be mixed via a diffused air or mechanical mixing system. The storage tank and mixing system would include added capital cost to design and construct, and higher annual O&M costs. The storage

tank (and mixing system) would benefit facility operations as it would provide more operational flexibility than is currently available to the operators (greater control over mixed liquor concentration in the aeration tank). Use of individual grinder pump stations could also drive the need for additional treatment processes at the WWTF. With the additional solids (including rags, debris and stringy material), it could be necessary (and recommended) that a mechanical screen be installed at the influent of the WWTF to protect the existing downstream treatment processes.

4.3.3 Funding Considerations

There are two major cost considerations when planning and implementing a sewer system expansion – 1) how are the capital costs paid; and 2) how will ongoing operations and maintenance (O&M) costs be recovered (i.e., sewer user fees).

Typically, capital costs associated with a sewer system expansion are paid for using a "betterment" fee system. The betterment fee is used to recover the total capital cost (construction, engineering, legal and administrative) of the project and can be structured in several different ways. The betterment fee can be structured so that the costs reflect the size of the user (so a large commercial property does not pay the same betterment as a 3-bedroom single family home, for example). Another option to fund the sewer expansion is to cover the capital costs by increasing the property tax rate and putting the burden on the town-wide tax base. The project capital costs can also be covered by using a combination of these two methods - betterment fee assessed to the "bettered" property owners (properties that abut the new sewer system) and the remaining portion of the capital cost being recovered via property taxes (for example, 75% of capital costs paid by betterment fees and 25% paid by property tax payers). The cost recovery method ultimately comes down to what is preferred by the municipality and approved by the Town voters.

There are several options for a sewer user fee structure. Typically, sewer user fees are based on water meter readings. However, in Bolton, there is no public water supply, so there is no municipally-based water meter reading system. A water meter could be installed for each property connected to the new municipal sewer system (on their private well piping system) and be used to determine individual property sewer user fees. Alternatively, since it is likely that a pumping system will be required for each new sewer service, a flow meter could be installed on the discharge piping of each sewer connection. Another non-metering option could include developing a sewer user fee structure based on typical MassDEP Title 5 design flows. Ultimately, the betterment fee and sewer user fee structures should be developed based on the Town's preference and with input from the sewer users and property tax base.

4.3.4 Additional Effluent Disposal

The existing permitted flow for the GWDP at the WWTF is 38,000 gpd. 9,600 gpd is reserved for the Town buildings and schools, leaving 28,400 gpd for expansion. The sewer expansion area outlined in this report would put the Town close to or over the permitted effluent flow limit. MassDEP typically recommends expanding the sewer service area in phases to ensure flow does not exceed the permitted discharge limits (and WWTF capacity). The phasing approach allows the Town to compare design flow values against actual values seen over time to evaluate whether more services could be added.

Should the Town desire to expand the service area and increase the flow beyond the current permitted limit, several items need to be considered. First, the capacity of the existing effluent disposal leaching field would need to be determined. The maximum capacity of the field is unknown at this time. It is possible that the existing leaching

field has more capacity than the permitted flow limit. To determine the capacity of the existing system, a hydrogeologic evaluation would need to be conducted. If the evaluation determines that the existing leaching field does not have additional capacity, additional land and disposal area would need to be permitted, designed and constructed. The process to develop additional effluent disposal area would involve hydrogeologic investigations (field work) and evaluation, permitting and approval by MassDEP, engineering design and construction. This process would add significant cost to a municipal sewer expansion project. In addition, there is limited available land in the immediate area of the WWTF and effluent disposal area. There are drinking water protection zones in the vicinity that would need to be protected. Also, should the desired flow exceed the capacity of the WWTF, additional capital costs would be incurred to upgrade the facility, potentially including larger equipment and additional tankage.

Appendix A
Flow Estimation

Parcel Size (acres)	Zoning	State Use Code	Building (Y/N)	# of developable parcels	Total No. of Bedrooms	Conservation/Recreational Land (Y/N - type)	Title 5 - Typical Flow per Bedroom (gpd)	Title 5 - Total Flowrate Estimate (gpd)	Property Address	Owner Name
0.6	R1	101: SINGLE FAMILY RESIDENCE	Y		3	N	110	330	727 MAIN ST	BONAZZOLI ROBERT P, TR
0.12	R1	101: SINGLE FAMILY RESIDENCE	Y		3	N	110	330	725 MAIN ST	CANDIDO WILLIAM DE OLIVEIRA
1.78	R1	104: TWO-FAMILY	Y		4	N	110	440	707 MAIN ST	BRISENO TAYLOR I
0.27	R1	031: MULTIPLE USE - PRIMARILY COMMERCIAL	Y		2	N	110	220	711 MAIN ST	DREWICZ NOELLE & JAMES
1.78	R1	101: SINGLE FAMILY RESIDENCE	Y		3	N	110	330	703 MAIN ST	PAYNE THOMAS M
0.85	R1	101: SINGLE FAMILY RESIDENCE	Y		5	N	110	550	698 MAIN ST	AMABILE HENRY P & GAIL B AMABILE
0.8	R1	104: TWO-FAMILY	Y		4	N	110	440	702 MAIN ST	OCHSENBEIN ROLAND A & CORNELIA B
0.5	R1	101: SINGLE FAMILY RESIDENCE	Y		3	N	110	330	704 MAIN ST	O'CONNOR ERIN L &
0.25	R1	101: SINGLE FAMILY RESIDENCE	Y		2	N	110	220	714 MAIN ST	COGGESHALL ALICE, TR
0.25	R1	101: SINGLE FAMILY RESIDENCE	Y		4	N	110	440	708 MAIN ST	COGGESHALL ALICE TR COGGESHALL REVOC TR
0.6	R1	111: APARTMENTS - 4 TO 8 UNITS	Y		5	N	110	550	720 MAIN ST	AMABILE HENRY P & JESSAMYN ROCKWELL, TR
0.4	R1	104: TWO-FAMILY	Y		5	N	110	550	726 MAIN ST	MARON JOHN P JR & LAWRENCE P CAMPBELL
0.7	R1	101: SINGLE FAMILY RESIDENCE	Y		4	N	110	440	730 MAIN ST	MCCARTHY TRAVIS J & DEANNA L
3.9	R1	104: TWO-FAMILY	Y		5	N	110	550	752 MAIN ST	KEEP MARIE C
1.75	R1	104: TWO-FAMILY	Y		4	N	110	440	733 MAIN ST	MURPHY D FRANCIS INS AGENCY INC
0.5	R1	101: SINGLE FAMILY RESIDENCE	Y		4	N	110	440	749 MAIN ST	MYERSON JOSEPH & LYNNE E JOHNSON
0.29	R1	101: SINGLE FAMILY RESIDENCE	Y		3	N	110	330	746 MAIN ST	HURD ANN S,TR
1.04	R1	101: SINGLE FAMILY RESIDENCE	Y		3	Y (PARTIAL) - SCENIC LANDSCAPE INVENTORY: NOTEWORTHY	110	330	777 MAIN ST	HUGHES MICHAEL E & MELANIE B
1.997	R1	109: MULTIPLE HOUSES ON ONE PARCEL	Y		4	N	110	440	683 MAIN ST	CASSIDY MARYANN C
0.47	R1	101: SINGLE FAMILY RESIDENCE	Y		4	N	110	440	674 MAIN ST	BENSETLER PATRICIA G
1.5	R1	101: SINGLE FAMILY RESIDENCE	Y		4	Y (PARTIAL) - MUNICIPAL	110	440	680 MAIN ST	QUINLAN JOHN J & BEATRICE E, TR
0.8	R1	104: TWO-FAMILY	Y		4	Y (PARTIAL) - MUNICIPAL	110	440	694 MAIN ST	SCHNEIDER STEPHEN & STEPHANIE
1.2	R1	101: SINGLE FAMILY RESIDENCE	Y		4	Y (PARTIAL) - MUNICIPAL	110	440	655 MAIN ST	CURTIS SETH & MEGAN

0.4	R1	101: SINGLE FAMILY RESIDENCE	Y		3	N	110	330	651 MAIN ST	FIANDACA ANTHONY J &ANNIE OCONNOR
1.86	R1	101: SINGLE FAMILY RESIDENCE	Y		3	N	110	330	649 MAIN ST	LANDERS PAUL O
1.02	R1	101: SINGLE FAMILY RESIDENCE	Y		3	N	110	330	631 MAIN ST	GUARNA VINCENT &
0.4	R1	101: SINGLE FAMILY RESIDENCE	Y		3	N	110	330	621 MAIN ST	SULLIVAN MICHAEL & JOANNE
3	R1	101: SINGLE FAMILY RESIDENCE	Y		3	N	110	330	615 MAIN ST	MAGUIRE MICHAEL R & LORRAINE T
0.8	R1	101: SINGLE FAMILY RESIDENCE	Y		3	N	110	330	607 MAIN ST	HASTIE MARISA
1	R1	109: MULTIPLE HOUSES ON ONE PARCEL	Y		2	N	110	220	601 MAIN ST	NICHOLS ROBERT A TR
0.61	R1	104: TWO-FAMILY	Y		4	N	110	440	608 MAIN ST	BICKFORD KAREN & JOHN
0.3	R1	101: SINGLE FAMILY RESIDENCE	Y		3	Y (PARTIAL) - MUNICIPAL	110	330	662 MAIN ST	TAJIMA KARA & MATTHEW NOLAN
0.2	R1	101: SINGLE FAMILY RESIDENCE	Y		4	Y - MUNICIPAL	110	440	664 MAIN ST	HANNAWAY SEAN & HEATHER
0.7	R1	101: SINGLE FAMILY RESIDENCE	Y		4	Y (PARTIAL) - MUNICIPAL	110	440	670 MAIN ST	DUHAME MEGHAN & SEAN
1	C / LB - LIMITED BUISNESS	101: SINGLE FAMILY RESIDENCE	Y		3	N	110	330	550 MAIN ST	HIETALA-GAY SANDRA A & JASON G
3.7	R1	951: CHARITABLE - OTHER	Y	1	3	N	110	330	0 MAIN ST	626 MAIN STREET LLC
2.18	R1	101: SINGLE FAMILY RESIDENCE	Y		5	N	110	550	2 JOHN POWERS LN	BRESTYAN RADU &
2.75	R1	101: SINGLE FAMILY RESIDENCE	Y		4	N	110	440	1 JOHN POWERS LN	MARKIN ANDREW NELSON &
2.29	R1	101: SINGLE FAMILY RESIDENCE	Y		4	N	110	440	3 JOHN POWERS LN	KMR REAL ESTATE LLC
2.36	R1	101: SINGLE FAMILY RESIDENCE	Y		4	N	110	440	5 JOHN POWERS LN	NESBEITT PETER &
17.1	R1	932	N	0	0	Y	110	0	0 JOHN POWERS LN	TOWN OF BOLTON
0.5	R1	101: SINGLE FAMILY RESIDENCE	Y		4	N	110	440	8 WATTAQUADOC HILL RD	BALENO MARGARET J
0.3	R1	101: SINGLE FAMILY RESIDENCE	Y		3	Y (PARTIAL) - MUNICIPAL	110	330	29 WATTAQUADOC HILL RD	ELZEY JOSHUA & ERIKA
0.72	R1	101: SINGLE FAMILY RESIDENCE	Y		3	N	110	330	23 WATTAQUADOC HILL RD	KEEFER MARK R & LEIGHANN E
0.8	R1	101: SINGLE FAMILY RESIDENCE	Y		3	N	110	330	48 MANOR RD	ROBINSON JOHN W & MARY CONDON ROBINSON
0.3	R1	101: SINGLE FAMILY RESIDENCE	Y		3	N	110	330	42 MANOR RD	KEANEY ERIN M
1.6	R1	101: SINGLE FAMILY RESIDENCE	Y		3	N	110	330	36 MANOR RD	TARR MORTON
1.41	R1	101: SINGLE FAMILY RESIDENCE	Y		4	N	110	440	9 MANOR RD	BICCHIERI JOAN F
0.28	R1	101: SINGLE FAMILY RESIDENCE	Y		3	N	110	330	31 MANOR RD	SMITH JOAN P
0.5	R1	101: SINGLE FAMILY RESIDENCE	Y		3	N	110	330	37 MANOR RD	RICHARDS CONSTANCE D
0.5	R1	101: SINGLE FAMILY RESIDENCE	Y		2	N	110	220	43 MANOR RD	OBRIEN KEVIN J

0.35	R1	101: SINGLE FAMILY RESIDENCE	Y		2	N	110	220	5 MANOR RD	BRYAN JEFFREY & JANET
2.08	R1	101: SINGLE FAMILY RESIDENCE	Y		4	N	110	440	25 MANOR RD	BERUBE BRIAN P & SARAH J
2.19	R1	101: SINGLE FAMILY RESIDENCE	Y		3	Y (PARTIAL) - MUNICIPAL	110	330	51 MANOR RD	THERRIEN MATTHEW D & ROBYN L
4.307	R1	101: SINGLE FAMILY RESIDENCE	Y		5	N	110	550	5 HARVARD RD	HARROP KEITH & WENDY

Parcel Size (acres)	Zoning	State Use Code	Building (Y/N)	Type of Building	Building Size (sq. ft.)	Total No. of Bedrooms	Conservation/Recreational Land (Y/N - type)	Title 5 Unit	Title 5 Flowrate (gal/unit-day)	Title 5 Total Estimated Flow	Property Address	Owner Name
2.64	C	325: SMALL RETAIL AND SERVICE STORES UNDER 10	Y	Multiple	4600	-	N	per 1000 sq ft	50	230	626 MAIN ST	626 MAIN STREET LLC
0.85	R1 / LB - LIMITED BUISINESS	341: BANKS	Y	Bank	1868	-	N	per 1000 sq ft	75	140.1	562 MAIN ST	WACHUSETT REALTY LLC
19.57	C	340: GENERAL OFFICE	Y		9600	N/A	N	per 1000 sq ft	75	720	579 MAIN ST	BOLTON PROPERTY MANAGEMENT LLC
1.08	LB - LIMITED BUISNESS	342: MEDICAL OFFICE	Y	Vet	-	-	N	per doctor	250	300	556 MAIN ST	CAVINESS ALAN R TR
3.16	LB - LIMITED BUISNESS	340: GENERAL OFFICE	Y	Dentist	-	-	N	per dentist	200	1000	563 MAIN ST	SWAND LLC
0.27	R1	031: MULTIPLE USE - PRIMARILY COMMERCIAL	Y		3470	-	N	per 1000 sq ft	75	260.25	711 MAIN ST	DREWICZ NOELLE & JAMES
0.14	R1	031: MULTIPLE USE - PRIMARILY COMMERCIAL	Y		3966	-	N	per 1000 sq ft	75	297.45	716 MAIN ST	WINNER SHAUN E & EMILY J
5.84	R1	340: GENERAL OFFICE	Y	Dentist	-	-	N	per dentist	200	400	737 MAIN ST	MURPHY D FRANCIS INS AGENCY INC
0.5	R1	430: TELEPHONE EXCHANGE STATIONS	Y		1254	-	Y (PARTIAL) - SCENIC LANDSCAPE INVENTORY: NOTEWORTHY	per 1000 sq ft	75	94.05	780 MAIN ST	BELL ATLANTIC CORP/VERIZON

Parcel Size (acres)	Zoning	State Use Code	Building (Y/N)	Building Size (sq. ft.)	Total No. of Bedrooms	Conservation/Recreational Land (Y/N - type)	Title 5 Unit	Title 5 Flowrate (gal/unit-day)	Title 5 Total Estimated Flow	Property Address	Owner Name	Co-Owner Name
3.7	R1	951: CHARITABLE - OTHER	Y	2048	-	N	per 1000 sq ft	75	153.6	676 MAIN ST	BOLTON HISTORICAL SOC	SAWYER HOUSE
1.85	R1	930: VACANT	N	-	-	Y - MUNICIPAL	person	5	0	0 MAIN ST	TOWN OF BOLTON	POND PARK & SKATING POND
0.24	R1	930: VACANT	N	-	-	N	person	5	0	0 MAIN ST	TOWN OF BOLTON	TOWN COMMON
6.377	R1	930: VACANT	N	-	-	N	person	5	0	715 MAIN ST	TOWN OF BOLTON	TOWN COMMON
10.53	R1	930: VACANT	N	-	-	Y - MUNICIPAL	person	5	100	0 WATTAQUADOC HILL RD	TOWN OF BOLTON	RECREATION FIELD

Parcel Size (acres)	Zoning	State Use Code	Building (Y/N)	Total No. of Bedrooms	Conservation/Recreational Land (Y/N - type)	Title 5 Unit	Title 5 Flowrate	Title 5 Total Flowrate	Property Address	Owner Name
6.9	R1	960: CHURCH, MOSQUE, SYNAGOGUE, TEMPLE ETC	Y	3	N	seat	6	480	12 WATTAQUADOC HILL RD	TRINITY CONGREG CHURCH
1.8	R1	960: CHURCH, MOSQUE, SYNAGOGUE, TEMPLE ETC	Y	-	N	seat	3	246	673 MAIN ST	FIRST PARISH OF BOLTON
1	R1	961: RECTORY OR PARSONAGE ETC	Y	N/A	N	Bedroom	110	220	642 MAIN ST	FIRST PARISH OF BOLTON
11.45	R1	959: HOUSING, OTHER	Y	28	Y (PARTIAL) - MUNICIPAL	Bedroom	110	3080	600 MAIN ST	BOLTON SENIOR HOUSING CORP

Appendix B
Vendor Literature

Water Technologies & Solutions

Budget proposal for the

Bolton School (aka Sawyer) WWTF-Replacement MBR System

Z-MOD M160T membrane bioreactor system

Submitted to:
Wright-Pierce
Cell:(978) 416-8033
attention: Megan Caless

September 17th, 2021

Proposal number: 472873 – revision 0

Submitted by:
Laura Stock - Regional Sales Manager
Cell: (905) 483-1562
Email: laura.stock@suez.com

Local representation by:
Technology Sales Associates Inc.
Mike Caso
Tel: (508) 878-7641
Email: mcaso@techsalesne.com

Table of contents

1 Basis of design 3
1.1 Influent flow data 3
1.2 Influent quality 3
1.3 Effluent quality 4
1.4 Influent variability 4
2 System design and scope 5
2.1 The Z-MOD M160T 5
2.2 Biological system design 7
2.3 Membrane system design 7
2.4 Z-MOD M160T equipment description 7
2.5 Membrane cleaning 10
2.6 Scope of supply by SUEZ 11
3 Buyer scope of supply 13
4 Commercial 15
4.1 Pricing table 15
4.2 Annual Power & Chemical Consumption Estimates 15
4.3 Equipment shipment and delivery 16
4.4 Freight 16
4.5 Terms and conditions of sale 17

SUEZ Water Technologies & Solutions confidential and proprietary information

The enclosed materials are considered proprietary property of SUEZ Water Technologies & Solutions (SUEZ). No assignments either implied or expressed, of intellectual property rights, data, know how, trade secrets or licenses of use thereof are given. All information is provided exclusively to the addressee and agents of the addressee for the purposes of evaluation and is not to be reproduced or divulged to other parties, nor used for manufacture or other means, without the express written consent of SUEZ. The acceptance of this document will be construed as an acceptance of the foregoing.

*The following are trademarks of SUEZ Water Technologies & Solutions and may be registered in one or more countries: InSight, LEAPmbr, LEAPprimary, Z-MOD, ZeeWeed, and ZENON

1 Basis of design

The proposed Z-MOD M160T Membrane Bioreactor System (MBR) for Bolton School (aka Sawyer) is offered based on the design parameters summarized in the following sections.

1.1 Influent flow data

The influent design flows are summarized in the table below.

influent design flows

flow conditions	value	units
average day flow (ADF)	38,000	gpd
maximum month flow (MMF)	38,000	gpd
maximum day flow (MDF)	38,000	gpd
peak hour flow (PHF)	57,000	gpd
maximum flow with one train offline for maintenance or cleaning (for less than 24 hours)	38,000	gpd

note 1: any flow conditions that exceed the above-noted flow limits must be equalized prior to treatment in the ZeeWeed membrane bioreactor system.

ADF – the average flow rate occurring over a 24-hour period based on annual flow rate data.

MMF – the average flow rate occurring over a 24-hour period during the 30-day period with the highest flow based on annual flow rate data.

MDF – the maximum flow rate averaged over a 24-hour period occurring within annual flow rate data.

PHF – the maximum flow rate sustained over a 1-hour period based on annual flow rate data.

1.2 Influent quality

The design solution proposed is based on the wastewater characteristics detailed below.

influent design parameters

influent design parameters	value	unit
design influent temperature	12.8	ºC
BOD5	500	mg/L
TSS	500	mg/L
NH3-N[1]	49	mg/L
TKN[1]	75	mg/L
TP[1]	N/A	mg/L
Alkalinity[2]	275	mg/L as $CaCO_3$

note 1: Parameter value assumed.

note 2: SUEZ is assuming that influent alkalinity is insufficient to ensure proper performance of the biological system. SUEZ has included a NaOH dosing system for pH control in the scope of supply.

1.3 Effluent quality

The following performance parameters are expected upon equipment startup and once the biological system has stabilized based on the data listed in sections 1.1 and 1.2.

effluent design parameters

effluent design parameters	value	unit
BOD_5	≤ 5	mg/L
TSS	≤ 5	mg/L
NH_3-N	≤ 1	mg/L
TN[1]	≤ 10	mg/L
turbidity	≤ 1	NTU
e-coli[2]	≤ 200	cfu/100 mL
pH	6 – 9	

note 1: TN ≤ 10 mg/L corresponds to a minimum design temperature of 12.8ºC and <1.5 mg/L recalcitrant dissolved organic nitrogen in the influent.

note 2: After disinfection.

1.4 Influent variability

Influent wastewater flows or loads in excess of the design criteria defined above must be equalized prior to entering the membrane tanks. In the event that the influent exceeds the specifications used in engineering this proposal, or the source of influent changes, the ability of the treatment system to produce the designed treated water quality and/or quantity may be impaired. Buyer may choose to continue to operate the system, but assumes the risk of damage to the system and/or additional costs due to increased membrane cleanings, potential for biological upset and/or increased consumable usage.

2 System design and scope

2.1 The Z-MOD M160T

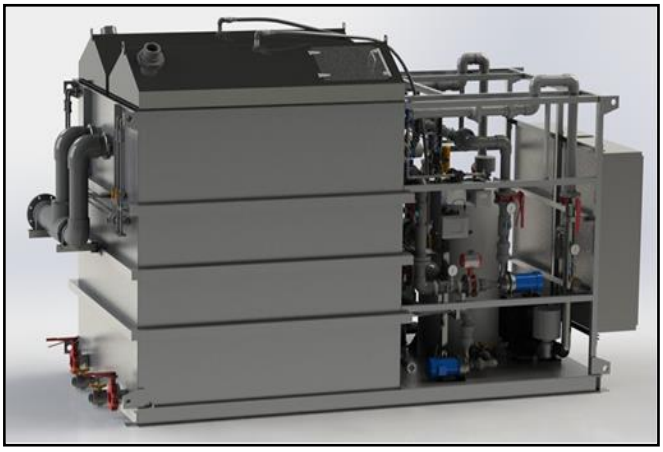

figure 1: Z-MOD M160T configuration

Z-MOD M160T Packaged Systems are pre-engineered, modular wastewater treatment systems that bring proven ZeeWeed membrane filtration system to municipal, industrial, or land development applications. Incorporating an integrated, skid-mounted design, Z-MOD M160T Packaged Systems can be quickly set up in virtually any location and feature scalable treatment capacity that can be quickly increased as demand grows. These ultrafiltration (UF) systems outperform conventional treatment alternatives in all categories, offering reduced operating costs, smaller plant footprints, more reliable performance, and high quality effluent that meets or exceeds the world's most stringent discharge and reuse standards.

Z-MOD M160T packaged systems produce superior quality effluent through an innovative combination of immersed SUEZ ZeeWeed ultrafiltration membranes and a suspended growth biological reactor. ZeeWeed UF membranes replace the solids separation function of secondary clarifiers and the polishing function of granular filter media that are found in conventional activated sludge systems. By eliminating the need for sludge settling, the Z-MOD M160T packaged system combined with the bioreactor treatment upstream can operate at mixed liquor suspended solids (MLSS) concentrations in the range of 8,000 to 12,000 mg/L, three to five times greater than conventional systems, resulting in designs that are significantly more compact.

Z-MOD M160T packaged systems bring the proven large-plant features and performance of ZeeWeed membranes to compact, pre-engineered wastewater treatment systems.

Fewer processes, combined with PLC control of principal system components, makes plant operation less labor intensive and much more straightforward. Plant operators are only required to perform regular preventive maintenance on membrane system pumps, blowers, and associated mechanical equipment to ensure efficient biological processes and optimum membrane permeation.

At the core of the Z-MOD M160T membrane filtration system is the ZeeWeed 500 reinforced hollow-fiber membrane—the industry's leading choice for long-life and high performance in the harsh, high-solids environment of a bioreactor. The rugged fibers are held in modular cassettes that are immersed directly into the mixed liquor.

Each cassette has a permeate header that is connected to the suction side of a centrifugal pump, which applies a low-pressure vacuum to draw treated effluent through the microscopic pores of the fibers in an outside-in flow path. This method of permeation minimizes energy demands and prevents particles from fouling and plugging the inside of the membrane fiber.

Outside-in permeation also simplifies membrane cleaning and maintenance, utilizing a stream of coarse bubbles which rise vertically along the length of the membrane to scour rejected solids away from the membrane surface. Periodically, the permeate flow can be automatically reversed to backflush solids that have accumulated on the membrane surface. When necessary, in-tank chemical recovery cleanings can restore membrane permeability to optimum levels.

ZeeWeed 500 is the membrane of choice for strict nitrogen and phosphorus discharge limits. Typically, the lead end of the bioreactor is designed as an anoxic zone. This is used to assist with pH control in standard systems and for denitrification in applications where total nitrogen (TN) removal is required.

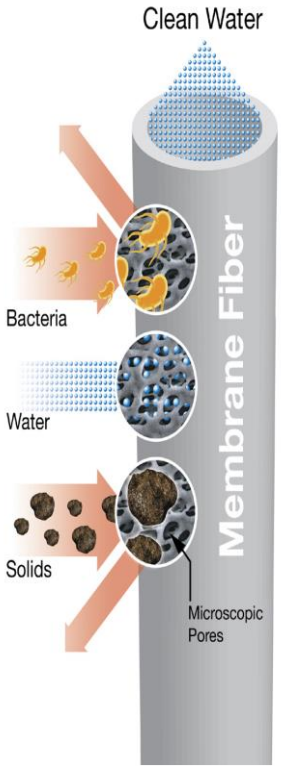

ZeeWeed UF membranes operate under a low-pressure vacuum, drawing clean water to the inside of the fiber (outside-in flow path), while leaving impurities in the process

2.2 Biological system design

The biological system for this project consists of pre-anoxic, aerobic and post-anoxic zones. The corresponding volumes for each zone are listed in the table below.

biological design parameters

biological design parameters	value	unit
flow basis for biological design	38,000	gpd
total pre-anoxic tank working volume	5,000	gal
total aerobic working volume (excluding membranes)	19,200	gal
total post-anoxic working volume	3,200	gal

note 1: Tank volumes are preliminary only and may change once final detail design commences.

note 2: The biological system is designed for installation within concrete tanks supplied by buyer.

2.3 Membrane system design

The membrane design of this system is described in the table below where membrane modules are assembled into cassettes and cassettes are installed in coated carbon steel tanks supplied by SUEZ.

membrane design parameters

membrane design parameters	value	unit
number of membrane trains	2	no.
number of Z-MOD M160T units	1	no.
number of cassette spaces per train	1	no.
number of cassettes installed per train	1	no.
type of cassette	8M	modules/ cassette
module design per train	(1x6)	n/a
total number of modules installed per train	6	no.
total number of modules installed per plant	12	no.
total number of cassettes installed per plant	2	no.

2.4 Z-MOD M160T equipment description

The following is a description of the equipment included in SUEZ's scope of supply. The filtration system is completely skid mounted including the backpulse tank, membrane tanks (with membrane cassette assemblies including air and permeate header), permeate and backpulse pumps, membrane blowers and control panel. Critical items that will be shipped loose for installation by buyer include the biological equipment,

membrane tank feed pumps, and chemical dosing systems. Please refer to section 2.6 below for a complete list of SUEZ supplied equipment.

membrane equipment

Six membrane modules are assembled into two ZeeWeed cassettes, which are installed into separate, skid-mounted membrane tanks on the Z-MOD unit. Separate membrane tanks provide system redundancy at average daily flow. Influent is fed from the process tank to the membrane tank and is isolated using an automated flow valve.

control equipment

An Allen Bradley Programmable Logic Controller (PLC) with a Human Machine Interface (HMI), installed in the main control panel, monitors and manages all critical process operations.

Level controls monitor the level of mixed liquor in the process tanks and transmit this information to the Z-MOD PLC. The PLC will activate the permeate pump train to ON during high mixed liquor levels, or to STANDBY during low mixed liquor levels in the process tanks.

In the event of a system or equipment problem requiring operator attention, the PLC can either alert the operator or shut the system down.

The control panel includes all motor control hardware for the standard SUEZ supplied equipment.

permeate equipment

One permeate pump per train draws treated effluent through the pores of the membrane fibers and into the backpulse tank. Once full, the treated effluent is automatically diverted away from the backpulse tank to a final disposal point. VFD's are used to adjust the discharge flow of the permeate pumps.

backpulse equipment

One skid-mounted pump is used to periodically reverse the flow of the permeate and backpulse the membranes at regular intervals. Under normal operating conditions, permeation is periodically stopped and aeration is used to dislodge particles from the surface of the membrane fibers. A full backwash sequence is often not required.

membrane scour aeration system

One membrane air scour blower per train is mounted on the Z-MOD skid with associated piping. The air scour blower provides membrane air scouring during production.

sludge wasting system

Sludge wasting is accomplished by periodically diverting mixed liquor from the membrane tank feed line, via manual control. The frequency of wasting is a function of influent characteristics, reactor design and operator preference. In certain operating circumstances, bioreactors can be designed to accommodate client preferences with regards to wasting frequencies.

trash trap/equalization tank grinder pumps (flows <50,000 gpd)

Trash and non-biodegradable solids, such as hair, lint, grit and plastics may foul or damage the membranes if allowed to pass into the membrane chamber. A trash trap system with an over-under baffle arrangement and 6-12 h retention time, is absolutely

required to maintain both membrane warranty, and optimal MBR operation. The trash-trap system may be integrated with the equalization tank, but requires additional retention time to ensure proper function.

Grinder pumps are included (loose shipped, to be installed in the equalization tank) to shred domestic waste to eliminate clogging and solid buildup in feed piping. The duplex grinder pumps are automatically activated by the PLC in a lead/lag arrangement according to the level controls in the equalization tank.

process aeration system

The process aeration blowers provide air for the biological tank and ensure that sufficient oxygen is available to maintain the biological processes in the tank. The process aeration blowers are shipped loose for installation on site.

fine bubble diffusers

A fine bubble diffused aeration system delivers air from the aeration blowers to the aerobic zone of the process tank. SUEZ supplies high efficiency diffusers that can operate with smaller aeration blowers, thus reducing operating costs.

process mixers

Process mixers are used to mix the pre-anoxic and post-anoxic chambers to prevent solids from settling.

mixed liquor recirculation equipment

Recirculation pumps are included to transfer mixed liquor from the bioreactor to the membrane tank at a rate of 5 × ADF. The sludge returns to the anoxic zone of the bioreactor using gravity at a rate of 4 × ADF.

supplementary recirculation equipment

Supplementary recirculation is necessary in cases where low effluent concentrations of TN are required. The mixed liquor recirculation system transfers mixed liquor from the aerobic chamber to the pre-anoxic chamber of the process tank.

sodium hypochlorite / citric acid dosing system

The sodium hypochlorite and citric acid dosing systems are included to facilitate the transfer of cleaning chemicals into the membrane tank during membrane cleaning events. Sodium Hypochlorite serves to remove organic fouling from the membrane surface, while Citric Acid is used to remove any inorganic scaling from the membrane surface.

pH adjustment system

The pH Control System is supplied to dose sodium Hydroxide into the process tank in order to maintain a desired pH for optimal biological performance. This system is meant for infrequent pH adjustment and is not meant as a substitute for insufficient alkalinity in the plant influent. If alkalinity deficiency has been identified as a potential concern in your application, alkalinity supplementation will also be required.

supplemental carbon addition

The supplemental carbon dosing system is used to feed a carbon substrate into the biological tanks to assist in the conversion of nitrates to nitrogen gas. This is only common in cases with low nitrogen discharge limits.

effluent flow measurement

An effluent flow meter is included to provide daily discharge flow measurements.

effluent turbidity analyzer

An effluent turbidity analyzer monitors effluent water quality and alerts operators if effluent turbidity rises beyond acceptable parameters.

effluent disinfection

Loose-shipped ultraviolet disinfection (UV) has been included. The UV system has been configured to meet peak flows with redundancy.

InSight Basic – digital asset monitoring

Water and process applications generate vast amounts of operating data. InSight, SUEZ's easy-to-use, cloud-based knowledge management platform, captures and transforms your plant data into meaningful and actionable information, ultimately providing the knowledge you need to maximize performance, avoid operational interruptions, optimize your processes, and reduce the total cost of operation.

InSight Basic – Digital Asset Monitoring has been provided with your UF system for the first year of operation. With InSight Basic, you will gain visibility into your plant's current and future performance by having complete access to your plant data through InSight. InSight Basic allows you to perform your own process monitoring, trending and analysis suited to your individual plant operations and success criteria. You will have access to the tools in InSight to add your own annotations, load your own analytical data and configure your own reports and alerts.

InSight Basic is enhanced with weekly automated performance reports and daily alarm notification summaries, allowing you to identify emerging problems earlier so that action can be taken now, before a failure can occur. In addition, InSight Basic customers will have access to InSight's built in analytics workspace where you can go beyond standard time based data analytics to uncover more valuable information and understand the underlying causal factors of your plant.

2.5 Membrane cleaning

Air scouring, membrane relaxation and backpulsing are the day-to-day methods used to maintain membrane performance. Over longer periods of time, the membranes can experience fouling caused by the accumulation of organic matter or crystallized salts within the membrane fiber pores. On these occasions, the ZeeWeed membranes may require recovery cleaning to restore permeability. The frequency of recovery cleaning is site-specific and directly dependent on influent water characteristics and plant duty cycle.

Typical recovery cleaning frequency is once every six months and includes soaking the membranes overnight in a cleaning solution.

Recovery cleaning is a chemical process that is carried out manually and in-situ using sodium hypochlorite and/or citric acid (as required). Sodium hypochlorite is used to oxidize organic foulants and citric acid removes inorganic scaling. The membrane cassette does not have to be removed from the Z-MOD unit in order to perform this cleaning process.

2.6 Scope of supply by SUEZ

scope of supply by SUEZ

quantity	description
The MBR system will consist of one (1) Z-MOD-M160T Unit including the following equipment:	
integrated ZeeWeed membrane tank & equipment skid	
1	membrane train equipment skid - stainless steel
2	stainless steel membrane tanks
2	ZeeWeed 500 membrane cassettes
12	membrane modules
2 sets	permeate collection & air distribution header piping
2	permeate pumps, complete with pressure gauge, flowmeter, piping and associated isolation valves
1	backpulse pump, complete with piping and associated isolation valves
1	backpulse water storage tank, with tank level control and associated valves
2	membrane air scour blowers, complete with pressure gauge, flow switch, isolation valves and acoustical enclosures
1	control panel - includes Allen Bradley PLC with touch screen HMI and skid mounted equipment VFD's/ starters.
2	pressure transmitters
membrane tank feed equipment	
1+1	membrane tank feed pumps, used to transfer mixed liquor from the bioreactor to the membrane tanks - includes isolation valves
biological tankage & equipment (for two biological train)	
lot	fine bubble diffuser system for process aeration -loose shipped (without tank downcomer piping)
2+1	process blowers, complete with flow switches, isolation valves and acoustical enclosures
2+1	supplementary recirculation pumps, used to transfer mixed liquor from the aerobic zone to the pre-anoxic zone - complete with isolation valves, flow meters and pressure gauges (redundant pump is supplied as a shelf spare)
4+1	process mixers (redundant mixer is supplied as a shelf spare)
2	aerobic dissolved oxygen sensor
2	pH sensor
chemical dosing systems	
1	supplemental carbon addition system - includes dosing pump and associated valving.

quantity	description
1	pH adjustment system – includes dosing pump and associated valving.
membrane cleaning systems	
1	sodium hypochlorite chemical feed system - includes dosing pump and associated valving.
1	citric acid chemical feed system - includes dosing pump and associated valving.
equalization tank transfer/grinder pump system	
1+1	grinder pumps - complete with isolation valves, pressure gauges and equalization tank level control
post treatment equipment	
1	turbidimeter - includes isolation valves, throttle valve and backplate
1+1	UV disinfection system
1+1	effluent transfer pumps
1	effluent flow meter
MCE and/or wall mount VFDs and starters	
1	Motor Control Enclosure and/or wall mount VFDs and starters for 3-phase motors in SUEZ scope (to be installed indoors)
miscellaneous	
1	air compressor for pneumatic valve operation and refrigerated air drier
1	digi modem for remote monitor system
1	equipment lifting davit arm with lifting cables
general	
included	P&IDs and equipment general arrangement and layout drawings for SUEZ supplied equipment
included	operating & maintenance manuals
included	field service and start-up assistance [1] – 20 days support over 2 site visits from SUEZ field-service personnel for commissioning, plant start-up, and operator training
included	InSight Basic – digital asset monitoring – 1 year
included	24/7 emergency phone support – 1 year
included	equipment mechanical warranty – 1 year or 18 months from shipment
included	membrane warranty – 10 year (2 year cliff and 8 year prorated)

note 1: Additional man-hours will be billed separately from the proposed system capital cost per day plus living and traveling expenses. Detailed SUEZ service rates are available upon request.

note 2: All SUEZ supplied equipment is designed for installation in an unclassified area.

3 Buyer scope of supply

The following items are for supply by buyer and will include, but are not limited to:

- overall plant design responsibility
- installation on site of all SUEZ-supplied skids and loose-shipped equipment
- review and approval of design parameters related to the membrane separation system
- review and approval of SUEZ-supplied equipment drawings and specifications
- detail drawings of all termination points where SUEZ equipment or materials tie into equipment or materials supplied by others
- equipment foundations, civil work, full floor coverage equipment contact pads, buildings, etc.
- receiving, unloading and safe storage of SUEZ-supplied equipment at site until ready for installation
- HVAC equipment design, specifications and installation (where applicable)
- UPS, power conditioner, emergency power supply and specification (where applicable)
- lifting devices including crane able to lift 2 ton for membrane removal, lifting davit crane and guide rails for submersible mixers and pumps, hoists, etc…
- trash trap or 1 to 2 mm pretreatment fine screen
- civil works, provision of main plant tank structure, buildings, equipment foundation pads etc. including but not limited to:
    - common channels, housekeeping pads, equipment access platforms, walkways, handrails, stairs etc.
    - bioreactor tank – complete with pre-anoxic, aerobic and post-anoxic zones
- treated water storage tank – as required
- process and utilities piping, pipe supports, hangers, valves, etc. including but not limited to:
    - piping, pipe supports and valves between SUEZ-supplied equipment and other plant process equipment
    - piping between any loose-supplied SUEZ equipment
    - process tank aeration system air piping, equalization tank system piping, etc.
    - interconnecting pipe between SUEZ-supplied skids and tanks
- electrical wiring, conduit and other appurtenances required to provide power connections as required from the electrical power source to the SUEZ control panel

and from the control panel to any electrical equipment, pump motors and instruments external to the SUEZ-supplied enclosure

- all bolts, brackets and fasteners to install SUEZ-supplied equipment. Seismic structural analysis and anchor bolt sizing.
- alignment of rotating equipment
- raw materials, chemicals, and utilities during equipment start-up and operation
- supply of seed sludge for process start-up purposes
- disposal of initial start-up wastewater and associated chemicals
- weather protection as required for all SUEZ supplied equipment. Skids and electrical panels are designed for indoor operation and will need shelter from the elements
- all permits

4 Commercial

4.1 Pricing table

Pricing for the proposed equipment and services, as outlined in section 2.6, is summarized in the table below. All pricing is based on the operating conditions and influent analysis that are detailed in section 1 of the proposal. The pricing herein is for budgetary purposes only and does not constitute an offer of sale. No sales, consumer use or other similar taxes or duties are included in the pricing below.

price: all equipment & service	
Proposed system price as per scope of supply proposed in section 2.6	$798,800 USD

4.2 Annual Power & Chemical Consumption Estimates

The data presented below is for information purposes only and is based on the design information provided by the Buyer and presuming that the equipment is operated according to the design basis and in accordance with Seller's Operations and Maintenance manuals.

Annual Power Consumption Estimate [1]

Equipment	kWh/year
Permeate Pumps	1,100
Backpulse Pumps [2]	0
Membrane Blowers	5,400
Process Blowers	24,000
Supplementary Recirculation Pumps	1,500
Membrane Tank Feed Pumps	2,400
Pre-anoxic Zone Mixers	1,400
Post-anoxic Zone Mixers	1,400
Total	**37,200**

note 1: Annual power consumption estimate is calculated at ADF condition with one membrane train in operation

note 2: Assumes membrane relaxation mode used

Annual Chemical Consumption Estimate

Chemical	US gal/year
Sodium Hypochlorite (10.3% w/w, SG: 1.168)	90
Citric Acid (50.0% w/w, SG: 1.24)	20

Note 1: Cleaning chemical consumption estimates are based on the frequencies and concentrations summarized in the table below. Frequencies are typical for ZW-MBR operation, actual frequency of maintenance and recovery cleans may change with final design, or may change once system is in operation.

Basis of Chemical Consumption Estimates

Chemical		Maintenance Clean	Recovery Clean
Sodium Hypochlorite Solution (10.3% w/w, SG: 1.168)	Frequency	2 times per week	2 times per year
	Concentration	200 mg/L	1,000 mg/L
Citric Acid Solution (50.0% w/w, SG: 1.24)	Frequency	N/A	2 times per year
	Concentration	N/A	2,000 mg/L

4.3 Equipment shipment and delivery

Equipment shipment is estimated at 24 to 30 weeks after order acceptance. The buyer and seller will arrange a kick off meeting after contract acceptance to develop a firm shipment schedule.

typical drawing submission and equipment shipment schedule

deliverables		6-8 weeks	2 weeks	14-18 weeks		2 weeks
acceptance of PO						
submission of drawings						
drawings approval						
equipment manufacturing						
equipment shipment						
plant operations manuals						

The delivery schedule is presented based on current workload backlogs and production capacity. This estimated delivery schedule assumes no more than 2 weeks for buyer review of submittal drawings. Any delays in buyer approvals or requested changes may result in additional charges and/or a delay to the schedule.

4.4 Freight

The following freight terms used are as defined by INCOTERMS 2010.

All pricing is CIP designated Bolton School WWTF project site. Off-loading and positioning of equipment at the job site is not included.

4.5 Terms and conditions of sale

This proposal has been prepared and is submitted based on seller's standard terms and conditions of sale.

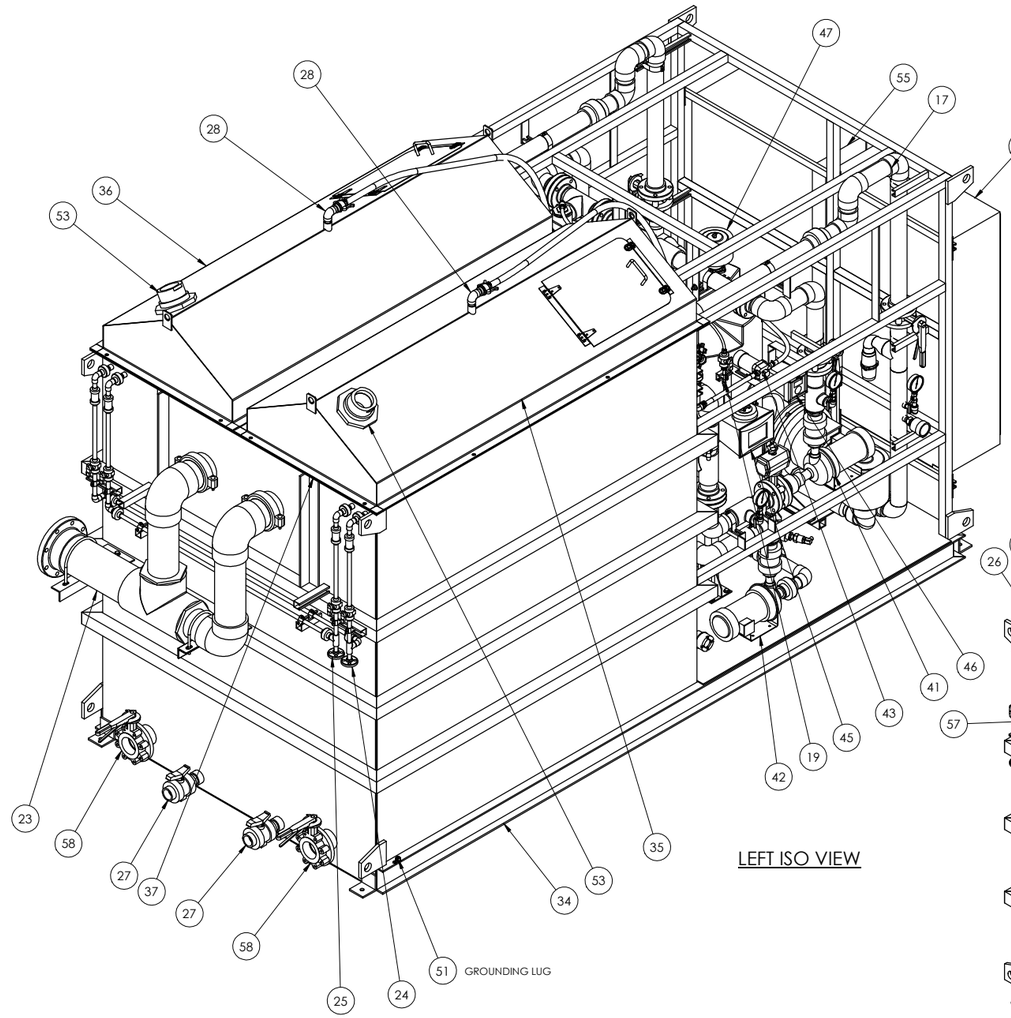

LEFT ISO VIEW

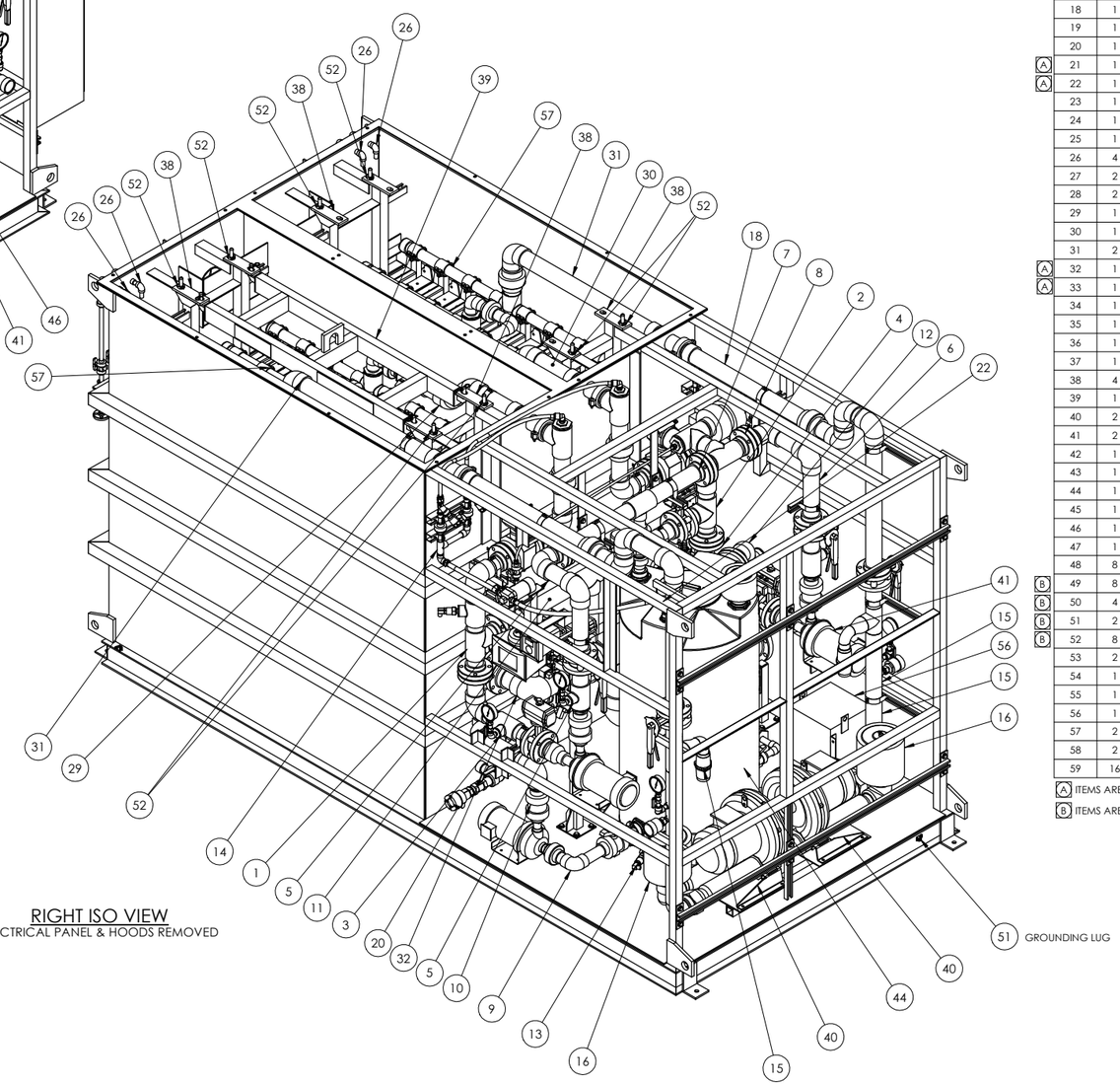

RIGHT ISO VIEW
ELECTRICAL PANEL & HOODS REMOVED

BILL OF MATERIAL

	ITEM	QTY.	SAP	DESCRIPTION	U/M
	1	1	2812000A-PP-01	PLMB-PERM,PVC,3.00,SUCT 1,T1	EA
	2	1	2812000A-PP-02	PLMB-PERM,PVC,3.00,SUCT 1,T2	EA
	3	1	2812000A-PP-03	PLMB-PERM,PVC,3.00,SUCT 2,T1	EA
	4	1	2812000A-PP-04	PLMB-PERM,PVC,3.00,SUCT 2,T2	EA
	5	1	2812000A-PP-05	PLMB-PERM,PVC,3.00,DISCH,T1	EA
	6	1	2812000A-PP-06	PLMB-PERM,PVC,3.00,DISCH,T2	EA
	7	1	2812000A-PP-07	PLMB-PERM,PVC,3.00,DISCH,COMMON 1	EA
	8	1	2812000A-PP-08	PLMB-PERM,PVC,3.00,DISCH,COMMON 2	EA
	9	1	2812000A-PP-09	PLMB-BACKPULSE,PVC,2.00,SUCT	EA
	10	1	2812000A-PP-10	PLMB-BACKPULSE,PVC,3.00,DISCH 1	EA
A	11	1	2812000A-PP-11	PLMB-BACKPULSE,PVC,3.00,DISCH 2	EA
A	12	1	2812000A-PP-12	PLMB-BACKPULSE,PVC,3.00,O/F	EA
	13	1	2812000A-PP-13	PLMB-BACKPULSE,PVC,0.50,LEVEL	EA
	14	1	2812000A-PP-14	PLMB-PRIMING,0.75,SUCT	EA
	15	2	2812000A-PP-15	PLMB-AIR,304,3.00,DISCH	EA
	16	2	2812000A-PP-16	PLMB-AIR,304,3.00,FILTER	EA
	17	1	2812000A-PP-17	PLMB-AIR,CPVC,3.00,DISCH,T1	EA
	18	1	2812000A-PP-18	PLMB-AIR,CPVC,3.00,DISCH,T2	EA
	19	1	2812000A-PP-19	PLMB-TURB,PVC,0.50	EA
	20	1	2812000A-PP-20	PLMB-LEVEL,316,1.50,TRANS	EA
A	21	1	2812000A-PP-21	PLMB-LEVEL,316,1.50,TRANS	EA
A	22	1	2812000A-PP-22	PLMB-PRIMING,PVC,0.75,DISCH	EA
	23	1	2812000A-PP-23	PLMB-O/F,PVC,8.00X6.00	EA
	24	1	2812000A-PP-24	PLMB-CHEMICAL,PVC,0.50,SODIUM HYPO	EA
	25	1	2812000A-PP-25	PLMB-CHEMICAL,PVC,0.50,CITRIC ACID	EA
	26	4	2812000A-PP-26	PLMB-CHEMICAL,PVC,0.50,INJECTION	EA
	27	2	2812000A-PP-27	PLMB-DRAIN,PVC,2.00	EA
	28	2	2812000A-PP-28	PLMB-SPRAYER,PVC,1.00	EA
	29	1	2812000A-PP-29	PLMB-PERM,PVC,3.00,T1	EA
	30	1	2812000A-PP-30	PLMB-PERM,PVC,3.00,T2	EA
	31	2	2812000A-PP-31	PLMB-AIR,CPVC,3.00,CASSETTE	EA
A	32	1	2812000A-PP-32	PLMB-FEED,PVC,6.00X4.00,PT	EA
A	33	1	2812000A-PP-33	PLMB-INSTRUMENT,304,0.50X0.38	EA
	34	1	2812000A-SA-01	ASSY-FRAME,304/316,Z-MOD M	EA
	35	1	2812000A-SB-13	FRAME-WLD'T,304,HOOD,Z-MOD M,T1	EA
	36	1	2812000A-SB-14	FRAME-WLD'T,304,HOOD,Z-MOD M,T2	EA
	37	1	2812000A-SB-15	GASKET-FAB,EPDM,0.25,Z-MOD M	EA
	38	4	3158316	FRAME-WLD'T,316,HANGER ARM,ZB500S-A	EA
	39	1	3158317	FRAME-WLD'T,304,LIFTING MODULE,ZB500S-A	EA
	40	2	3089846	BLOWER-REGEN,10HP,230/480/60/3,FPZ	EA
	41	2	3159242	PUMP-CENT,2.0HP,480/60/3,GOULDS,2ST	EA
	42	1	3159244	PUMP-CENT,1.5HP,480/60/3,GOULDS,2ST	EA
	43	1	3101227	PUMP-DIAPH,5GPM,115VAC,1.5A,FLOJET	EA
	44	1	3144299	TANK-BACKPULSE,HDPE,ATM,DOME/FLAT,ACO	EA
	45	1	3159335	ANLZER-TURB,120VAC,HACH,TU5300	EA
	46	1	3090984	CONTROLLER,DUAL 4-20MA,100-240,SC200,HA	EA
	47	1	3072904	FLT-AIR,2"MNPT,TK,VENT,POLYESTER	EA
	48	8	3076827	SCREW-CAP,316,0.375-16CX5.00,HH	EA
B	49	8	3040424	NUT,HEX,316,0.38-16	EA
B	50	4	3079667	CLAMP-STRUT,SS,3.00,B-LINE	EA
B	51	2	3097123	TERMINAL-LUG,14-2 STR,KA2U,BURNDY	EA
B	52	8	3085920	COLLAR,DOUBL SPLIT SHAFT,SS,0.75,SP01.75	EA
	53	2	1118602	FTG-BHD,PVC,S80,SOCXFNPT,4.00	EA
	54	1	2812000A-EE-01	ELEC-ASSY,MBR,STARTER PANEL	EA
	55	1	2812000A-EE-02	ELEC-ASSY,MBR,MAIN CONTROL PANEL	EA
	56	1	2812000A-EA-01	ELEC,TRANS,480/120VAC,.5KVA,ENCAPS	EA
	57	2	315XXXX	M/C-ZB500S-A,600,FLO,8/8,316L,CON,3IN	EA
	58	2	1202367	VALVE-BTFLY,316,4.00,MAN,LG,150,BR	EA
	59	16	1264037	WASHER-FLAT,316,0.38	EA

A ITEMS ARE BALLOONED ON SHEET 4

B ITEMS ARE BALLOONED ON SHEET 5

REV	DESCRIPTION	ECO	DWN	APPR	APPR	DATE
A	REFERENCE ONLY - NOT FOR CONSTRUCTION		ML	SA	RJ	15 May 18

PROPRIETARY AND CONFIDENTIAL: THIS DRAWING AND ALL INFORMATION AND KNOWLEDGE CONTAINED OR REFERRED HEREIN ARE THE CONFIDENTIAL AND PROPRIETARY PROPERTY OF SUEZ AND AS SUCH ARE INSTRUMENTS OF SERVICE FOR USE SOLELY WITH RESPECT TO THIS PROJECT. THESE INSTRUMENTS OF SERVICE SHALL NOT BE REPRODUCED, TRANSMITTED, DISCLOSED OR USED OTHERWISE IN WHOLE OR IN PART, WITHOUT PRIOR WRITTEN AGREEMENT BY SUEZ AND MUST BE IMMEDIATELY RETURNED OR DESTROYED UPON REQUEST.

TOLERANCES UNLESS NOTED
DECIMALS: .X; .XX +/-0.50; .XXX
ANGLES: +/-0.5°; FRAC +/- 1/2"

CUSTOMER INFORMATION: Z-MOD M

GENERAL ARRANGEMENT
ASSY-PUMP,304/316,480/60/3,Z-MOD M160T
PUMP TO

DRAWING NUMBER: 2812000A-PG-01
REVISION: A
REF.:
DOC. OWNER:
PROJECT NO.: 2812000
PART/MATERIAL NO.: 2812000A
SCALE: 1:16
SIZE: D
SHEET: 1 OF 5

LAST SAVED: Tuesday, May 15, 2018 10:34:10 AM

FILE LOCATION: C:\GEWaterVault\SYSTEMS-PFO\2812000 - Z-MOD M\2. Mechanical Drawings\

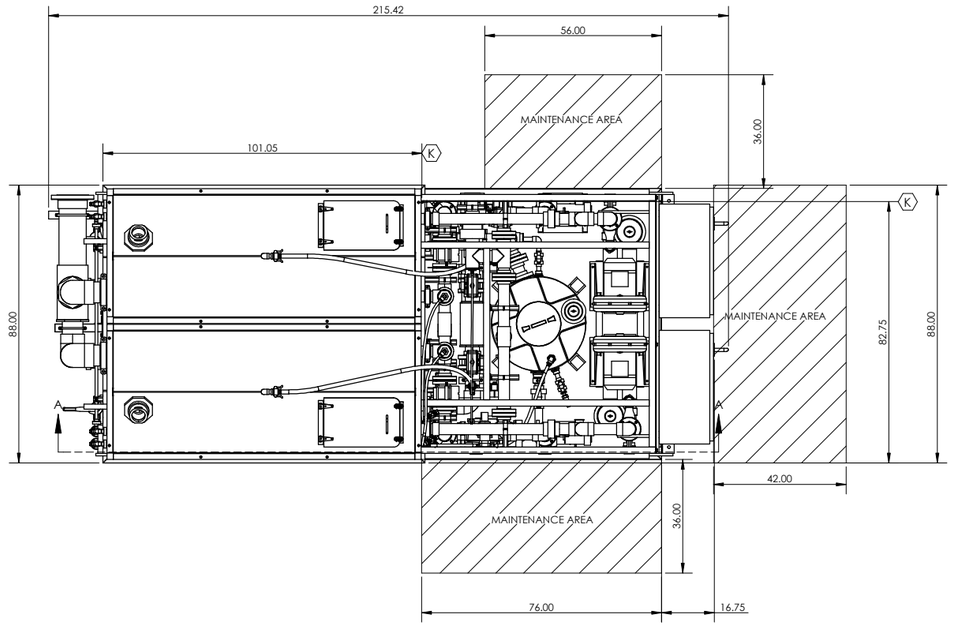

PLAN VIEW

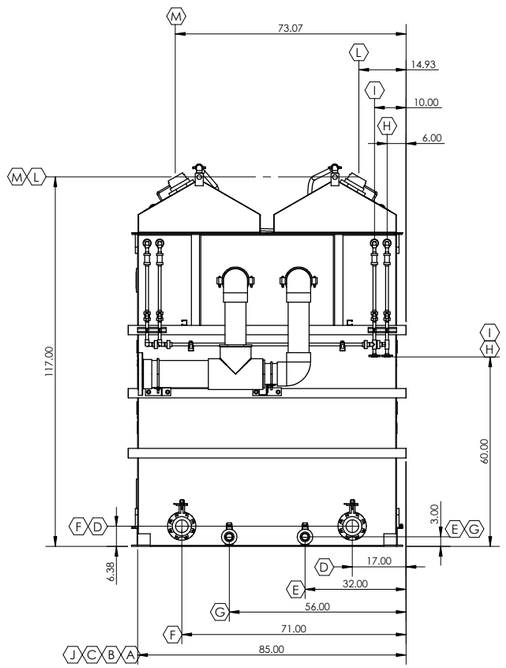

LEFT END VIEW

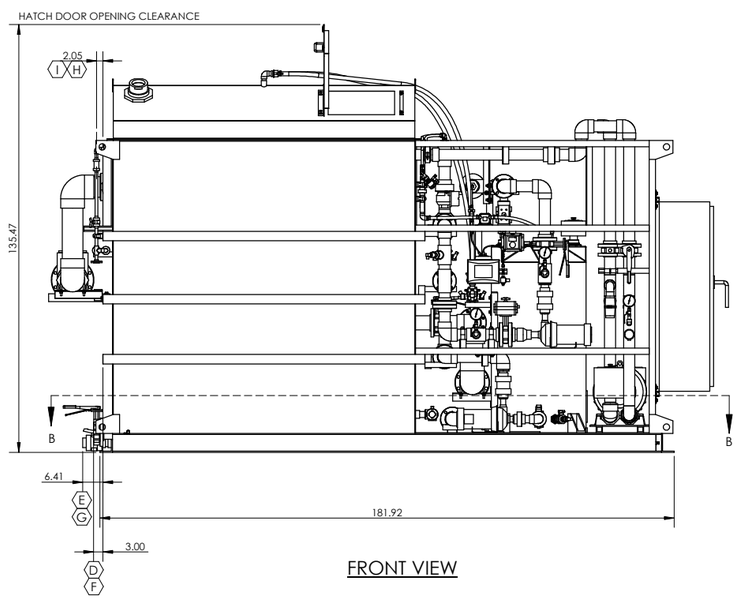

FRONT VIEW

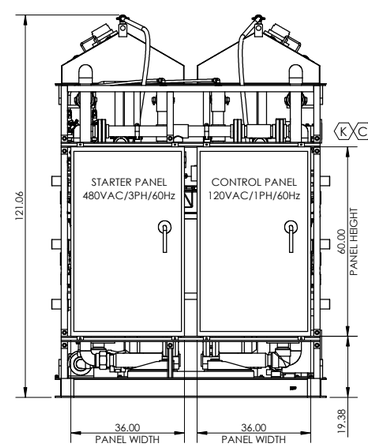

RIGHT END VIEW

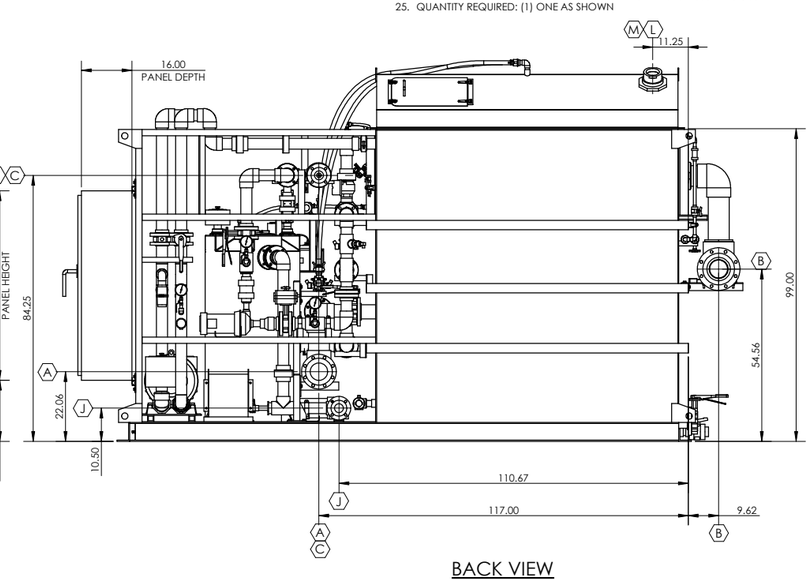

BACK VIEW

CONNECTION TABLE

ITEM	DESCRIPTION	TYPE	SIZE
A	FEED FROM MEMBRANE FEED PUMPS	150# RF FLG	6.0
B	MIXED LIQUOR TO BIOREACTOR (BY GRAVITY)	150# RF FLG	8.0
C	EFFLUENT PERMEATE TO FINAL TREATMENT	150# RF FLG	3.0
D	TRAIN 1 - PRIMARY DRAIN	150# RF FLG	4.0
E	TRAIN 2 - PRIMARY DRAIN	150# RF FLG	4.0
F	TRAIN 1 - SECONDARY DRAIN	SOCKET/FNPT	2.0
G	TRAIN 2 - SECONDARY DRAIN	SOCKET/FNPT	2.0
H	SODIUM HYPOCHLORITE INJECTION	150# RF FLG	0.5
I	CITRIC ACID INJECTION	150# RF FLG	0.5
J	BACKPULSE TANK EMERGECY OVERFLOW	150# RF FLG	3.0
K	INSTRUMENT AIR	FNPT	0.5
L	TRAIN 1 - MEMBRANE TANK VENT	FNPT	4.0
M	TRAIN 2 - MEMBRANE TANK VENT	FNPT	4.0

NOTES:

1. EST. EMPTY TANK WEIGHT: 10,000 LBS [4,535 kg.]
2. EST. TANK OPERATING WEIGHT: 45,000 LBS [20,410 kg.]
3. EST. CASSETTE SHIPPING WEIGHT: 1,590 LBS [721 kg.]
4. EST. CASSETTE MAX. WEIGHT (SLUDGED): 3,200 LBS [1,450 kg.] (INCLUDING LIFTING MODULE)
5. RECOMMENDED CRANE LIFTING CAPACITY: 2 TON
6. ALL PIPING & EQUIPMENT SHOWN SHALL BE FULLY SUPPORTED BY SUEZ WT&S PRODUCTION.
7. ALL INTERCONNECTING PIPING SHALL BE FULLY & INDEPENDENTLY SUPPORTED BY OTHERS.
8. PIPING MATERIAL:
   - AIR: SCH. 80, CPVC, SCH. 10, 316
   - PERMEATE: SCH. 80, PVC
9. GASKET MATERIAL:
   - CPVC LINES: EPDM
   - SS LINES: BLUE GUARD
10. FASTENER MATERIAL:
    - 316SS
11. TANK MATERIAL OF CONSTRUCTION:
    - 304/316SS
12. LEVELNESS AND SMOOTHNESS OF THE UF ZeeWeed TANK AND HOUSEKEEPING PAD IS CRITICAL TO THE SYSTEM'S PERFORMANCE. TANK BOTTOM FOUNDATION MUST BE CONTINUOUSLY SUPPORTED AND LEVELED TO A DEVIATION OF LESS THAN 1/8" OVER THE SPAN OF 10FT. IN AND DIRECTION.
13. TANK TO BE LIFTED FROM LIFTING LUGS IDENTIFIED IN FRONT VIEW, USING STRAPPING (BY OTHERS).
14. ANCHOR EMBEDMENT AND DESIGN IS BY OTHERS.
15. SUPPORTS, PIPING, ETC. SUPPLIED BY SUEZ WT&S WILL BE REMOVED FOR SHIPPMENT. FIELD INSTALLATION US BY OTHERS.
16. TANK MUST BE FLUSHED AND CLEANED PRIOR TO MEMBRANE LOADING TO AVOID DAMAGE.
17. PIPING TO BE HEAT TRACED AND INSULANTED BY OTHERS IF RISK OF FREEZING EXISTS.
18. LIFTING MODULE IS NOT TO BE LEFT INSIDE MAMBRANE TANK DURING OPERATION. A STORAGE SPACE WILL BE REQUIRED WHEN LIFTING MODULE IS NOT IN USE.
19. TANK HOODS WILL BE SHIPPED LOOSE AND WILL NEED TO BE INSTALLED ON SITE, DUE TO SHIPPING CONSTRAINTS. ASSEMBLIED ON SITE BY OTHERS.
20. FALL ARREST TIE OFF POINT ARE DESIGNED & SUPPLIED BY OTHERS.
21. A PLATFORM LADDER WITH HANDRAILS SHOULD BE USED WHEN WORKING AT THE TOP OF THE TANKS TO INSTALL OR REMOVE THE CASSETTE. LADDER IS PROVIDED BY OTHERS. THE PLATFORM HEIGHT SHOULD BE AROUND 50" FROM THE FLOOR.
22. ALL DIMENSIONS IN INCHES.
23. ALL DIMENSIONS ARE FOR REFERENCE.
24. REFERENCE - PIPING & INSTRUMENTATION DIAGRAM: 2812000-AP-04, 05
25. QUANTITY REQUIRED: (1) ONE AS SHOWN

REV	DESCRIPTION	ECO	DWN	APPR	APPR	DATE
A	REFERENCE ONLY - NOT FOR CONSTRUCTION		ML	SA	RJ	15 May 18

PROPRIETARY AND CONFIDENTIAL: THIS DRAWING AND ALL INFORMATION AND KNOWLEDGE CONTAINED OR REFERRED HEREIN ARE THE CONFIDENTIAL AND PROPRIETARY PROPERTY OF SUEZ AND AS SUCH ARE INSTRUMENTS OF SERVICE FOR USE SOLELY WITH RESPECT TO THIS PROJECT. THESE INSTRUMENTS OF SERVICE SHALL NOT BE REPRODUCED, TRANSMITTED, DISCLOSED OR USED OTHERWISE IN WHOLE OR IN PART, WITHOUT PRIOR WRITTEN AGREEMENT BY SUEZ AND MUST BE IMMEDIATELY RETURNED OR DESTROYED UPON REQUEST.

TOLERANCES UNLESS NOTED

DECIMALS	ANGLES
.X	+/-0.5°
.XX +/-0.50	FRAC
.XXX	+/- 1/2"

CUSTOMER INFORMATION

Z-MOD M

GENERAL ARRANGEMENT

ASSY-PUMP,304/316,480/60/3,Z-MOD M160T

PUMP TO

DRAWING NUMBER	REVISION
2812000A-PG-01	A

REF.: DOC. OWNER:

PROJECT NO.	PART/MATERIAL NO.	SCALE	SIZE	SHEET
2812000	2812000A	1:24	D	2 OF 5

LAST SAVED: Tuesday, May 15, 2018 10:34:10 AM

FILE LOCATION: C:\GEWaterVault\SYSTEMS-FO\2812000 - Z-MOD M\2. Mechanical Drawings\

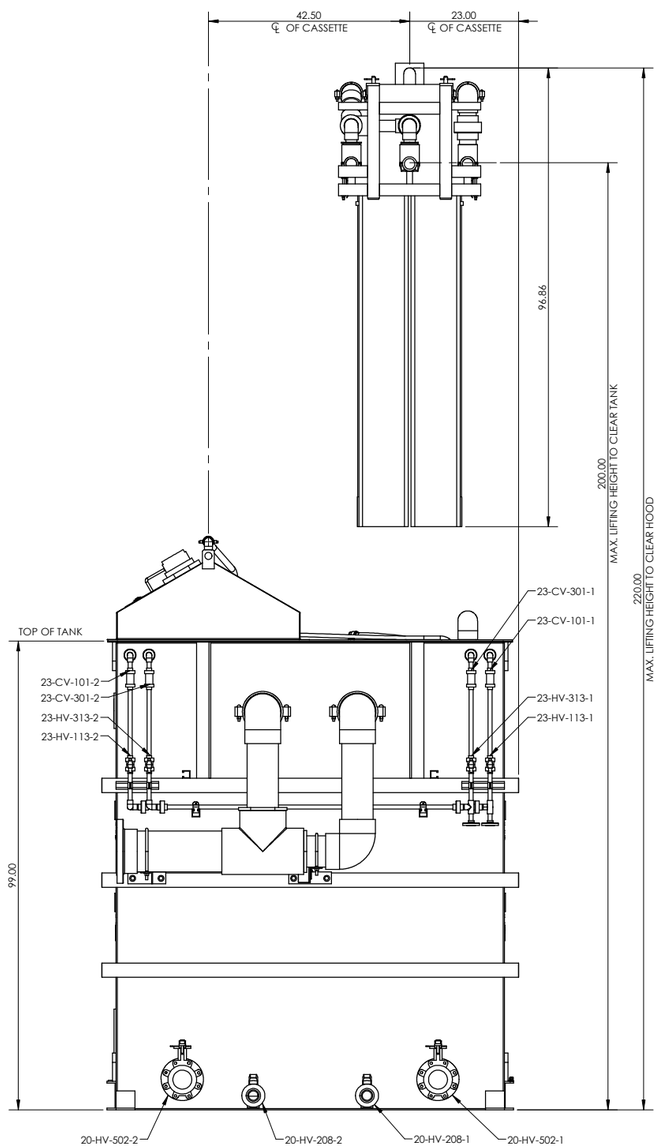

LEFT END VIEW

HOOD IS REMOVED FOR CASSETTE INSTALLATION & REMOVAL

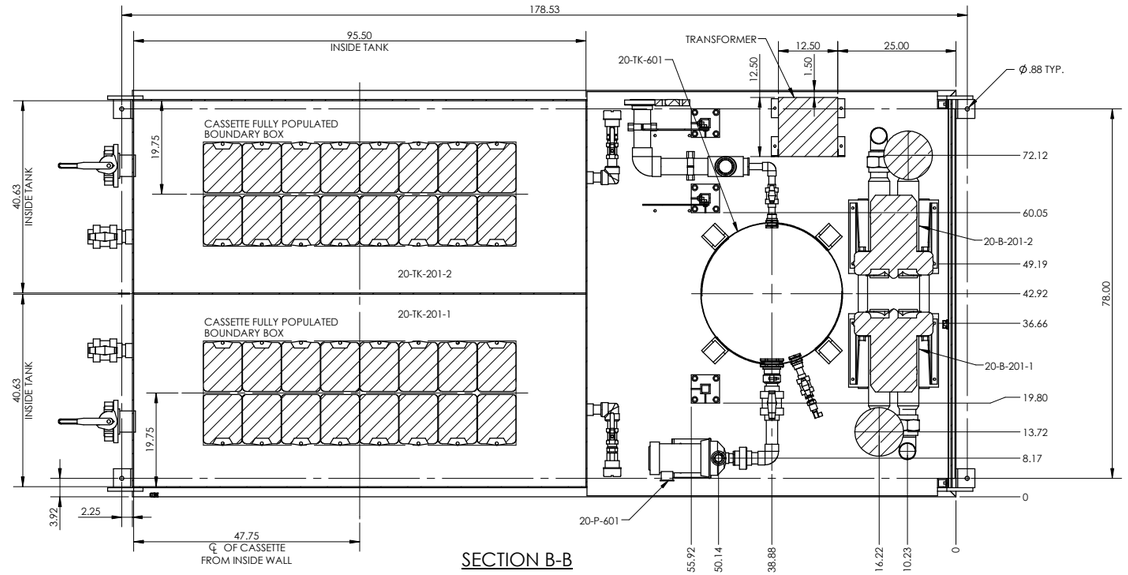

SECTION B-B

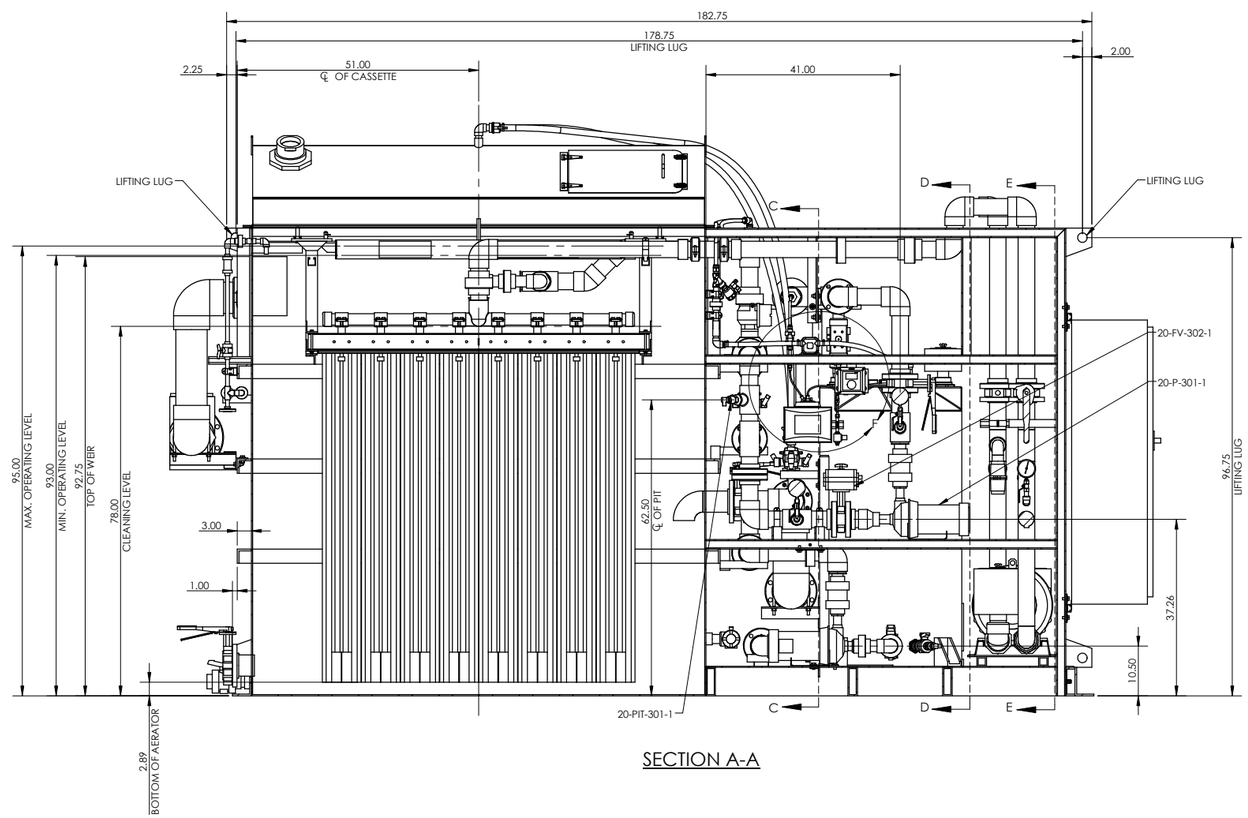

SECTION A-A

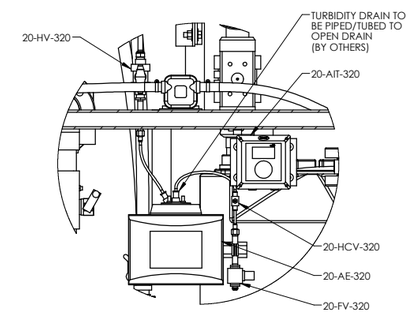

DETAIL F

SCALE 1 : 8

REV	DESCRIPTION	ECO	DWN	APPR	APPR	DATE
A	REFERENCE ONLY - NOT FOR CONSTRUCTION		ML	SA	RJ	15 May 18

TOLERANCES UNLESS NOTED

DECIMALS	ANGLES
.X	+/-0.5°
.XX +/-0.50	FRAC
.XXX	+/- 1/2"

PROPRIETARY AND CONFIDENTIAL: THIS DRAWING AND ALL INFORMATION AND KNOWLEDGE CONTAINED OR REFERRED HEREIN ARE THE CONFIDENTIAL AND PROPRIETARY PROPERTY OF SUEZ AND AS SUCH ARE INSTRUMENTS OF SERVICE FOR USE SOLELY WITH RESPECT TO THIS PROJECT. THESE INSTRUMENTS OF SERVICE SHALL NOT BE REPRODUCED, TRANSMITTED, DISCLOSED OR USED OTHERWISE IN WHOLE OR IN PART, WITHOUT PRIOR WRITTEN AGREEMENT BY SUEZ AND MUST BE IMMEDIATELY RETURNED OR DESTROYED UPON REQUEST.

CUSTOMER INFORMATION

Z-MOD M

GENERAL ARRANGEMENT

ASSY-PUMP,304/316,480/60/3,Z-MOD M160T

PUMP TO

DRAWING NUMBER	REVISION
2812000A-PG-01	A

REF.: DOC. OWNER:

PROJECT NO.	PART/MATERIAL NO.	SCALE	SIZE	SHEET
2812000	2812000A	1:16	D	3 OF 5

LAST SAVED: Tuesday, May 15, 2018 10:34:10 AM

FILE LOCATION: C:\GEWaterWorks\FS\SERVER-FO\2812000 - Z-MOD M\2. Mechanical Drawings\

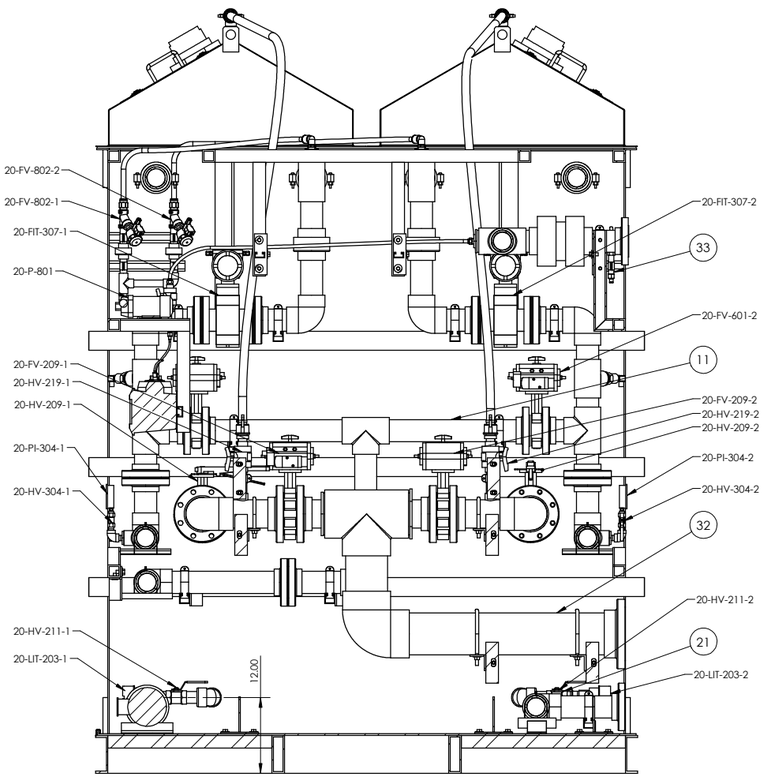

SECTION C-C

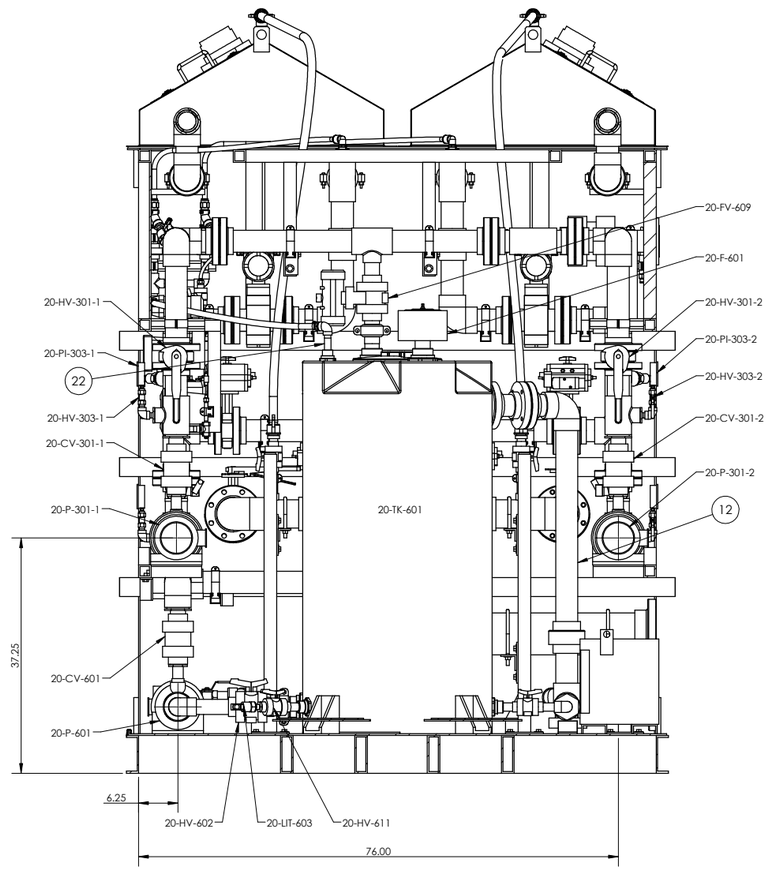

SECTION D-D

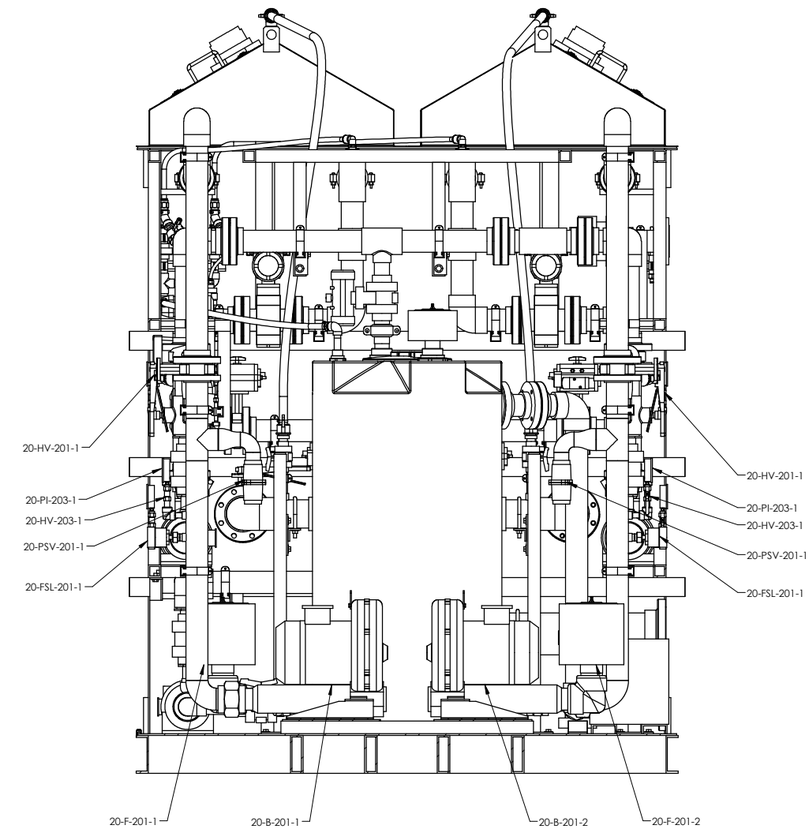

SECTION E-E

REV	DESCRIPTION	ECO	DWN	APPR	APPR	DATE
A	REFERENCE ONLY - NOT FOR CONSTRUCTION		ML	SA	RJ	15 May 18

PROPRIETARY AND CONFIDENTIAL: THIS DRAWING AND ALL INFORMATION AND KNOWLEDGE CONTAINED OR REFERRED HEREIN ARE THE CONFIDENTIAL AND PROPRIETARY PROPERTY OF SUEZ AND AS SUCH ARE INSTRUMENTS OF SERVICE FOR USE SOLELY WITH RESPECT TO THIS PROJECT. THESE INSTRUMENTS OF SERVICE SHALL NOT BE REPRODUCED, TRANSMITTED, DISCLOSED OR USED OTHERWISE IN WHOLE OR IN PART, WITHOUT PRIOR WRITTEN AGREEMENT BY SUEZ AND MUST BE IMMEDIATELY RETURNED OR DESTROYED UPON REQUEST.

TOLERANCES UNLESS NOTED

DECIMALS	ANGLES
.X	+/-0.5°
.XX +/-0.50	FRAC
.XXX	+/- 1/2"

CUSTOMER INFORMATION

Z-MOD M

GENERAL ARRANGEMENT

ASSY-PUMP,304/316,480/60/3,Z-MOD M160T

PUMP TO

DRAWING NUMBER				REVISION
2812000A-PG-01				A
REF.:		DOC. OWNER:		
PROJECT NO. 2812000	PART/MATERIAL NO. 2812000A	SCALE 1:12	SIZE D	SHEET 4 OF 5

LAST SAVED: Tuesday, May 15, 2018 10:34:10 AM

FILE LOCATION: C:\GEWaterVault\SYSTEMS-FO\2812000 - Z-MOD M\2. Mechanical Drawings\

CASSETTE/HANGER ASSEMBLY

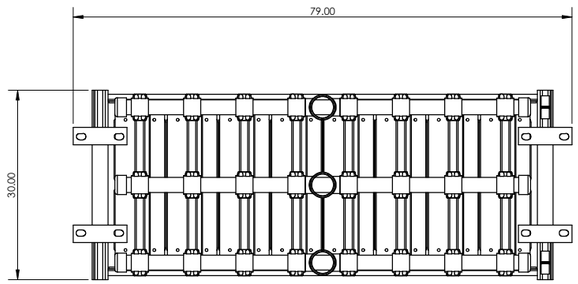

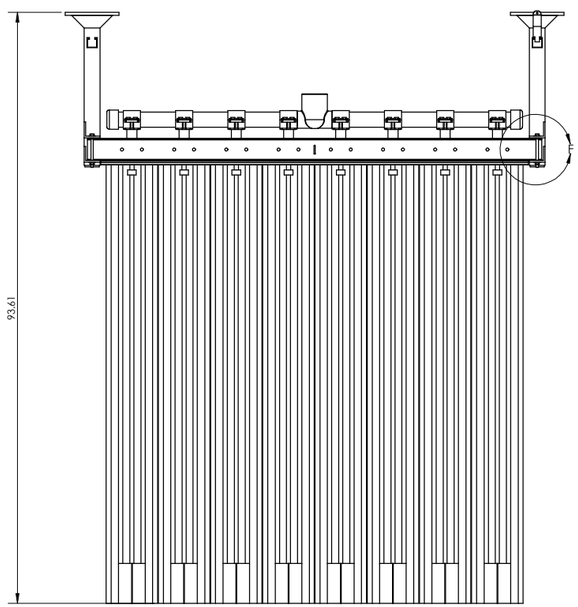

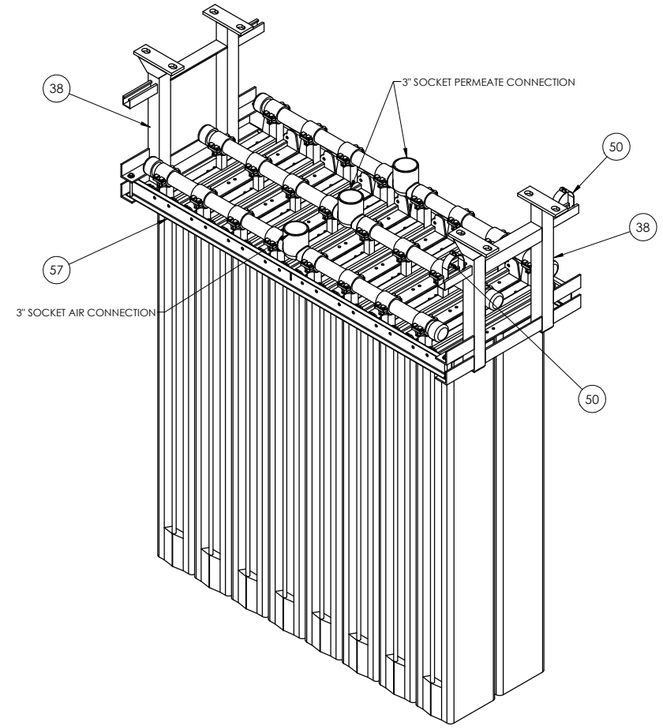

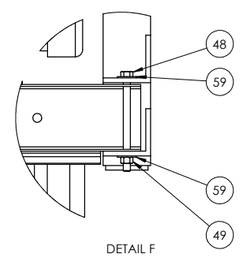

DETAIL F
SCALE 1 : 4
4 PLCS

LIFTING MODULE
ONE SUPPLIED PER PLANT
(SEE NOTE 18)

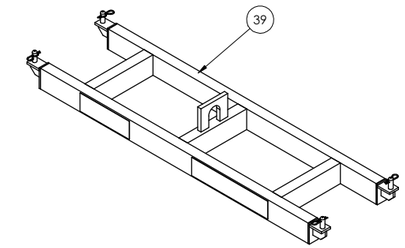

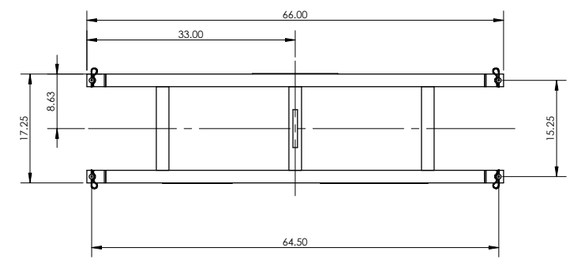

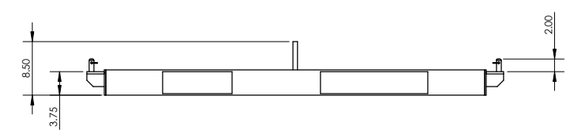

REV	DESCRIPTION	ECO	DWN	APPR	APPR	DATE
A	REFERENCE ONLY - NOT FOR CONSTRUCTION		ML	SA	RJ	15 May 18

TOLERANCES UNLESS NOTED
DECIMALS .X .XX +/-0.50 .XXX
ANGLES +/-0.5°
FRAC +/- 1/2"

PROPRIETARY AND CONFIDENTIAL: THIS DRAWING AND ALL INFORMATION AND KNOWLEDGE CONTAINED OR REFERRED HEREIN ARE THE CONFIDENTIAL AND PROPRIETARY PROPERTY OF SUEZ AND AS SUCH ARE INSTRUMENTS OF SERVICE FOR USE SOLELY WITH RESPECT TO THIS PROJECT. THESE INSTRUMENTS OF SERVICE SHALL NOT BE REPRODUCED, TRANSMITTED, DISCLOSED OR USED OTHERWISE IN WHOLE OR IN PART, WITHOUT PRIOR WRITTEN AGREEMENT BY SUEZ AND MUST BE IMMEDIATELY RETURNED OR DESTROYED UPON REQUEST.

CUSTOMER INFORMATION

Z-MOD M

GENERAL ARRANGEMENT

ASSY-PUMP,304/316,480/60/3,Z-MOD M160T

PUMP TO

DRAWING NUMBER: 2812000A-PG-01

REVISION: A

REF.:

DOC. OWNER:

PROJECT NO.	PART/MATERIAL NO.	SCALE	SIZE	SHEET
2812000	2812000A	1:12	D	5 OF 5

LAST SAVED: Tuesday, May 15, 2018 10:34:10 AM

FILE LOCATION: C:\GEWaterVault\SYSTEMS-IFO\2812000 - Z-MOD M\2.Mechanical Drawings\

For Earth, For Life

Kubota

Budgetary Proposal For

Bolton Wastewater Treatment Facility

Massachusetts

Kubota

Membrane Bioreactor System

August 18, 2021

Prepared By:

Kubota Membrane USA
11807 North Creek Parkway S., Suite B-109
Bothell, WA 98011
425-898-2858

Local Representation By:

Carlsen Systems
Michael Sullivan
508-878-1016
msullivan@carlsensystems.com

August 18th, 2021

For Earth, For Life
Kubota

Megan Caless
Wright-Pierce
600 Federal St, Suite 2151
Andover, MA 01810

Ms. Caless,

I am pleased to present the attached materials for your consideration regarding the proposed Kubota membrane bioreactor (MBR) system for the Bolton WWTP retrofit project. Kubota Membrane USA (KMU) is a company with a strong history in the U.S., backed by Kubota Corporation's extensive wastewater experience worldwide. The Kubota MBR system has unique features that will save your client time through simple and reliable operation.

A compelling feature of the Kubota MBR system is the simplicity of daily operations and periodic maintenance. Both the membrane unit and the MBR system are designed for the operator's convenience. Cleaning is performed in place, with no routine membrane unit removal required. Cleaning events are performed two to four times per year, and each event can be completed in a matter of hours. Also, because the Kubota MBR System uses a flat sheet membrane, it offers straightforward troubleshooting and easy replacement in the unlikely event that problems arise.

Kubota Membrane USA offers first class service. Our technicians have operational experience and are well trained in wastewater analysis and membrane inspection. This sets us apart from other membrane manufacturers who do not design, build, or operate treatment plants, and system integrators who do not manufacture parts or operate plants. We are responsive to operator concerns and knowledgeable about the Kubota MBR System from top to bottom.

With the Kubota name comes a long history of excellence in MBR wastewater treatment. We are happy to put you in touch with operators and engineers who can share their experiences with our product. If you have any questions regarding our proposal, please feel free to contact us or our local representative, **Name of Company, at Phone number or email**.

Regards,

Kevin Crane
Regional Manager
KUBOTA Membrane USA Corporation
Cell: 425-381-3604
Email: kevin.crane@kubota.com

Tessora Young
Application Engineer
KUBOTA Membrane USA Corporation
425-286-9081
tessora.young@kubota.com

Table of Contents

1 Introduction 1

2 Company Background 1

2.1 History 1

2.2 Design Support and After-Sales Service 2

2.3 Kubota's Experience 3

3 Technology Description 4

3.1 Membrane Product Information 4

3.2 MBR Process Description 5

3.3 Operation and Maintenance 6

4 Design Overview 7

4.1 Influent Design Flow 7

4.2 MBR Specifications 8

4.3 Preliminary Layout 8

4.4 Annual Operational Costs 9

4.4.1 Annual Energy Estimates 9

4.4.2 Annual Chemical Consumption (CIP) 11

5 Scope of Supply 12

5.1 Major Equipment and Instrumentation 12

5.2 Direct Services 14

5.3 Exclusions to Kubota Scope of Supply 15

6 Warranty 15

7 Budgetary Price 16

8 24/7 Technical Support 16

9 Additional Services (Optional) 16

Kubota Membrane USA Corporation 2021

This document is the property of KUBOTA Corporation. This document may not be duplicated and/or published without prior written consent of the owner.

Tables

Table 1: Kubota Submerged Membrane Unit Installations Worldwide as of December 2019 3
Table 2: Design Flow Conditions 7
Table 3: Influent and Effluent Characteristics 8
Table 4: Membrane Equipment Specifications 8
Table 5: Tank Dimensions and Hydraulic Retention Times 9
Table 6: Estimated Daily Power Consumption 11
Table 7: Major Equipment and Instrumentation in Kubota's Scope of Supply 12
Table 8: Training and Workshops Included in Kubota's Scope of Supply 14
Table 9: Budgetary Price for Proposed Kubota MBR Equipment and Equipment 16
Table 10: Kubota's Available Services 16

Figures

Figure 1: Progression of the Kubota Membrane 1
Figure 2: Kubota Design Support 2
Figure 3: Kubota's Service and Well-Trained Support Team 2
Figure 4: Membrane Unit Structure (left), and Fixed Membrane Spacing (right). 4
Figure 5: Typical CAS Process (top) vs. Kubota MBR Process (bottom) 5
Figure 6: Skid-Mounted Clean-In-Place System 6
Figure 7: Chemical Cleaning for Other Manufacturers (left) vs. Kubota Membrane Units (right) 7
Figure 8: Process Flow Schematic 9
Figure 9: Assumed Diurnal Flow Pattern 10

Kubota Membrane USA Corporation 2021
This document is the property of KUBOTA Corporation. This document may not be duplicated and/or published without prior written consent of the owner.

1 Introduction

Kubota Membrane USA would like to thank you for the opportunity to present the enclosed budgetary proposal to supply a membrane bioreactor (MBR) system and associated components for the Bolton, Massachusetts project. Included below is a brief background of the Kubota Corporation and Kubota's Submerged Membrane Unit. This is followed by a description of the proposed system, along with a scope of supply and budgetary price.

2 Company Background

2.1 History

Kubota Corporation has been designing and building wastewater treatment plants since the early 1960s. Long before building wastewater treatment plants, the company became involved with water engineering projects in 1893 as a manufacturer of iron piping, which was used for clean water distribution. As the largest engineering contractor for wastewater treatment plants in Japan, Kubota has the capability to design, build and operate municipal and industrial wastewater treatment plants.

In the 1980s, Kubota developed its own MBR technology using an external tubular type of ultrafiltration membrane. After the initial installation of these membranes in a soil treatment plant in Japan, Kubota realized these membranes lacked energy efficiency, had short life spans, and required frequent maintenance. This prompted Kubota to find an alternative to the external tubular membranes. In 1989, Kubota pioneered the energy-efficient, long-lasting, and easy-to-use flat sheet membrane with its Submerged Membrane Unit. Kubota's Submerged Membrane Unit was designed specifically for wastewater treatment applications, and is currently installed in wastewater treatment plants around the world, making Kubota a leader in the flat sheet MBR technology market.

The first installation of the Kubota flat sheet Submerged Membrane Unit was for a mechanical tool equipment manufacturer in Hiroshima in 1990. Kubota has refined and improved the membrane product for over 25 years (*Figure 1*). Kubota membranes were first introduced to the U.S. in 2002. Today, MBR systems using the Kubota membrane have been installed all over the world for numerous applications in addition to sewage treatment, such as brewery, dairy, food processing, pharmaceutical and chemical, laundry, leachate, and electrical industry wastes, as well as for sludge liquor treatment and water reuse.

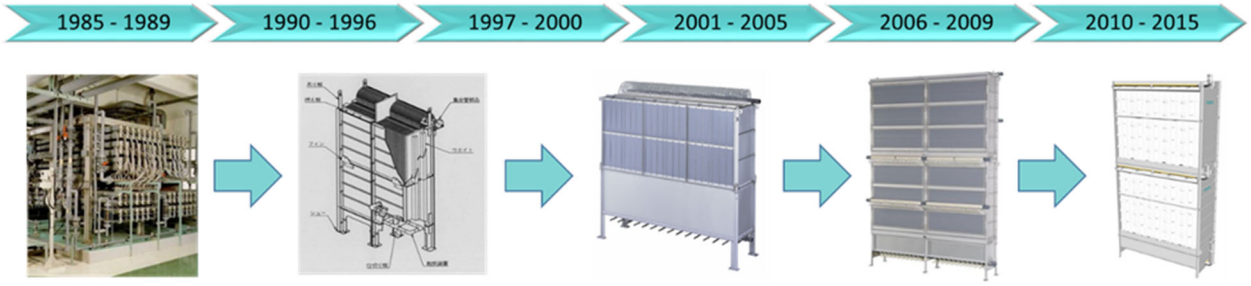

Figure 1: Progression of the Kubota Membrane

Kubota Membrane USA Corporation 2021
This document is the property of KUBOTA Corporation. This document may not be duplicated and/or published without prior written consent of the owner.

2.2 Design Support and After-Sales Service

Kubota Membrane USA has technical staff in Bothell, Washington and Canton, Ohio who can help the customer with any design or operational needs of this project. Kubota staff members are available to provide technical support to consulting engineers, WWTP operators, and WWTP owners. Additionally, Kubota has a Research and Development Center in Canton, OH, which focuses on optimizing the design and performance of Kubota membrane systems for the North American market.

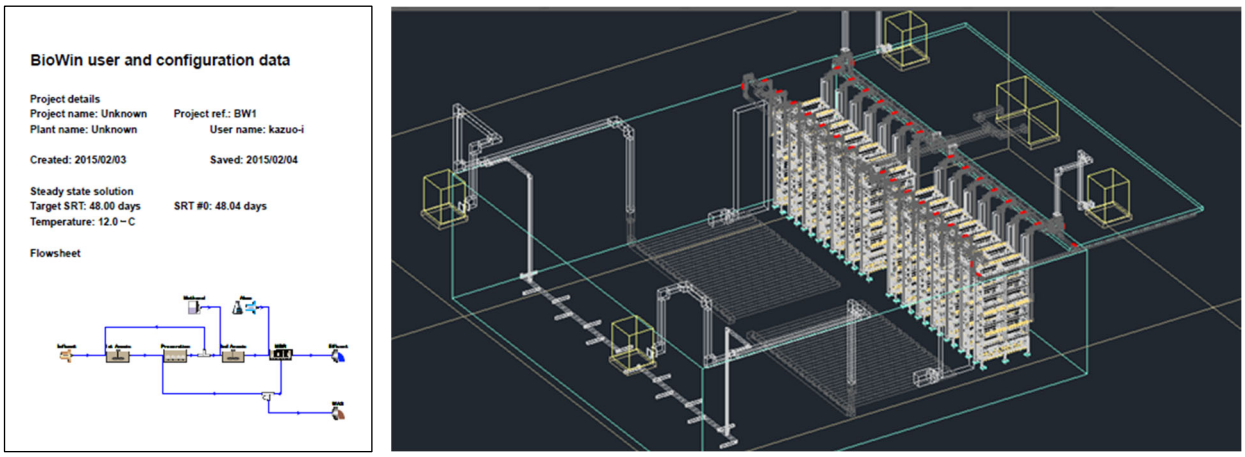

Figure 2: Kubota Design Support

Kubota provides staff on a regular basis for service and support of construction activities and throughout the warranty period. The service provided includes delivery inspection, installation certification, training, commissioning and ongoing technical support. Kubota will also provide operation and maintenance (O&M) manuals and 24/7 customer support.

Figure 3: Kubota's Service and Well-Trained Support Team

Kubota Membrane USA Corporation 2021
This document is the property of KUBOTA Corporation. This document may not be duplicated and/or published without prior written consent of the owner.

2.3 Kubota's Experience

Kubota has extensive experience in all facets of MBR system projects including designing, building, and operating MBR systems. Kubota has executed over 300 Design-Build projects, operates over 30 plants, and has over 150 maintenance contracts. Kubota also designed, operates, and maintains the 80,000 GPD MBR treatment facility for the Kubota Tractor Factory in Georgia, USA.

As of 2019, Kubota MBR systems have been installed at over 6,500 facilities worldwide, making Kubota the top supplier in the world. Even prior to the first U.S. MBR installations, Kubota had already been designing, building, and operating MBR systems around the world for many years.

Table 1: Kubota Submerged Membrane Unit Installations Worldwide as of December 2019

Region	Number of Installations
North America	447
Europe & Africa	677
Middle East	121
Asia (Except Japan) & Oceania	710
Japan	4,593
Total MBR Plants	**6,548**

Kubota Membrane USA Corporation 2021
This document is the property of KUBOTA Corporation. This document may not be duplicated and/or published without prior written consent of the owner.

3 Technology Description

3.1 Membrane Product Information

For this project, we have developed a proposed system design based on Kubota's FS200 Submerged Membrane Unit. The FS series was launched in 1991. For over 25 years, it has provided simple and reliable treatment in a compact and robust package. Ideal for smaller facilities, the FS/FK series offers high quality effluent with simple maintenance and operation. Kubota's philosophy of learning from our extensive experience in MBR systems worldwide is one of our greatest advantages, setting us apart from more newly developed membrane manufacturers. A basic overview of the FS/FK series of Submerged Membrane Units and of the Kubota membrane cartridge is included in the figure below.

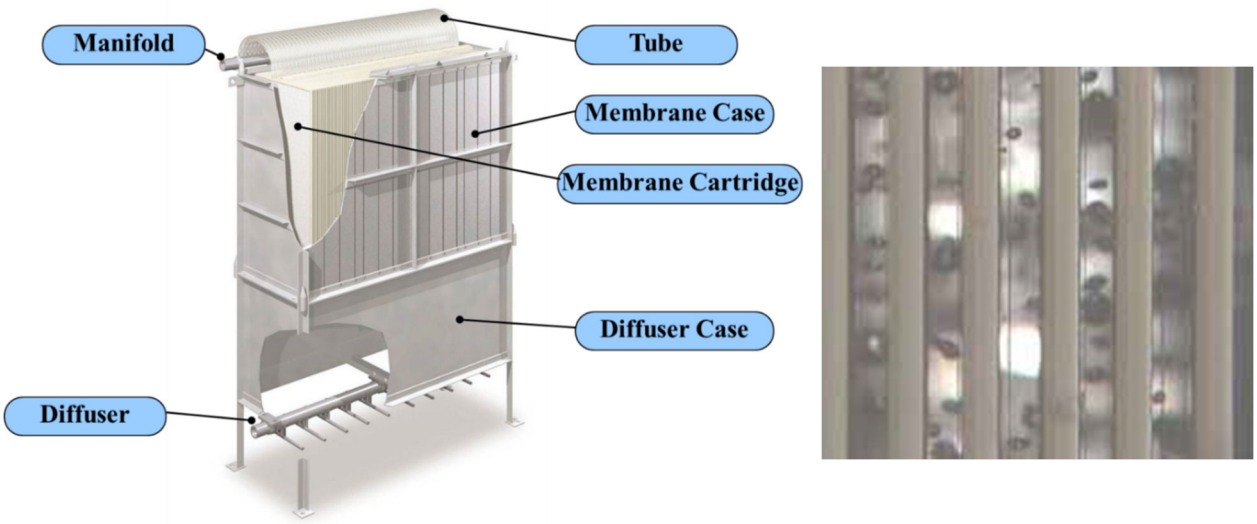

Figure 4: Membrane Unit Structure (left), and Fixed Membrane Spacing (right).

Kubota's membrane sheet is made from chlorinated polyethylene with an average pore size of 0.2 micron (maximum 0.4 micron). Kubota's membrane is much thicker than other membranes to provide long-lasting durability and features high porosity to enable high flow. This pore size has been designed as the optimum balance between water quality and quantity. Kubota's membrane sheet has Title 22 approval for water reuse in California.

The membrane sheet is welded on an ABS structural panel, and these panels are carefully aligned and spaced within the modules. This structure allows for very efficient self-cleaning from the air supplied by the diffuser. The spacing between each membrane is fixed to avoid uneven aeration and fouling.

Kubota Membrane USA Corporation 2021
This document is the property of KUBOTA Corporation. This document may not be duplicated and/or published without prior written consent of the owner.

3.2 MBR Process Description

The MBR treatment process is capable of meeting strict nutrient removal requirements while still maintaining a small footprint. Each MBR is the combined process of activated sludge (secondary treatment) and membrane filtration (tertiary treatment). Membrane units are installed in the activated sludge reactor, where sludge and treated water are separated by means of physical filtration. Other treatment processes, such as conventional activated sludge, require gravity sedimentation through the use of final clarifiers. MBRs eliminate the need for gravity sedimentation, thereby eliminating the need for final clarifiers.

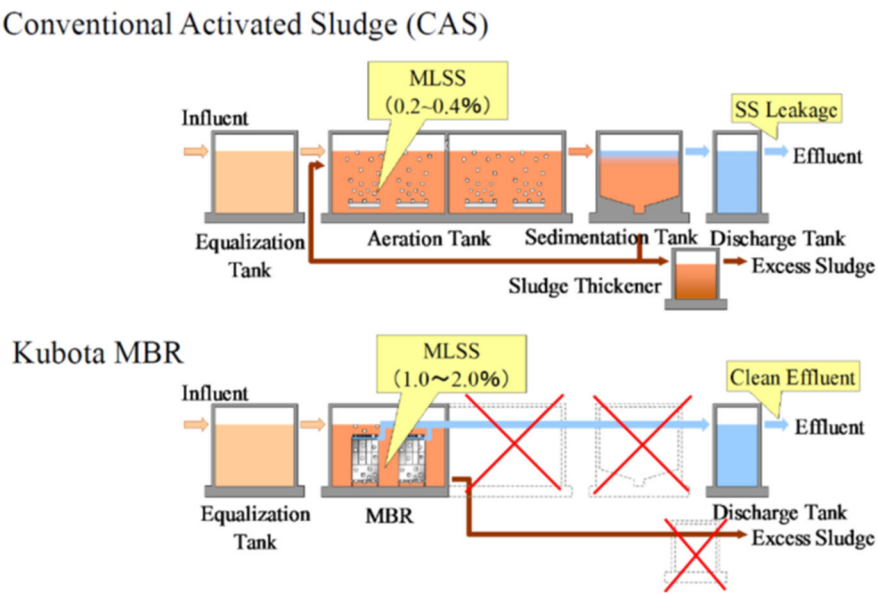

Figure 5: Typical CAS Process (top) vs. Kubota MBR Process (bottom)

Additionally, the Kubota FS series can operate at mixed liquor concentrations ranging from 5,000 mg/L to 18,000 mg/L, which is much higher than that of a conventional activated sludge basin or that of hollow fiber MBR systems. This not only reduces the required aeration volume and the volume of waste sludge produced, but also gives the system increased ability to withstand influent load fluctuations.

The Kubota MBR tank works as both a solid-liquid separation tank and an aeration tank to support the biological process. Because of Kubota's stable air scour and infrequent in-situ chemical cleaning, aeration from the air scour can be considered as oxygen supply for biological treatment. This helps to reduce the oxygen requirement in the aeration tank and thus helps decrease the total operational energy cost of the treatment process.

Kubota Membrane USA Corporation 2021
This document is the property of KUBOTA Corporation. This document may not be duplicated and/or published without prior written consent of the owner.

3.3 Operation and Maintenance

Simplicity is a core tenet of the Kubota MBR system. The Kubota MBR system offers a simple design, simple operation, and simple maintenance. The primary method of membrane cleaning for the Kubota MBR system is the air scour provided by the diffusers at the base of the membrane units. The chemical cleaning system is extremely simple and eliminates the need for separate tanks or tank linings for immersive cleaning. The system consists of a venturi injector which feeds the cleaning solution through the permeate piping using municipal utility water. The venturi system can be skid-mounted on a wall, as shown in the figure below.

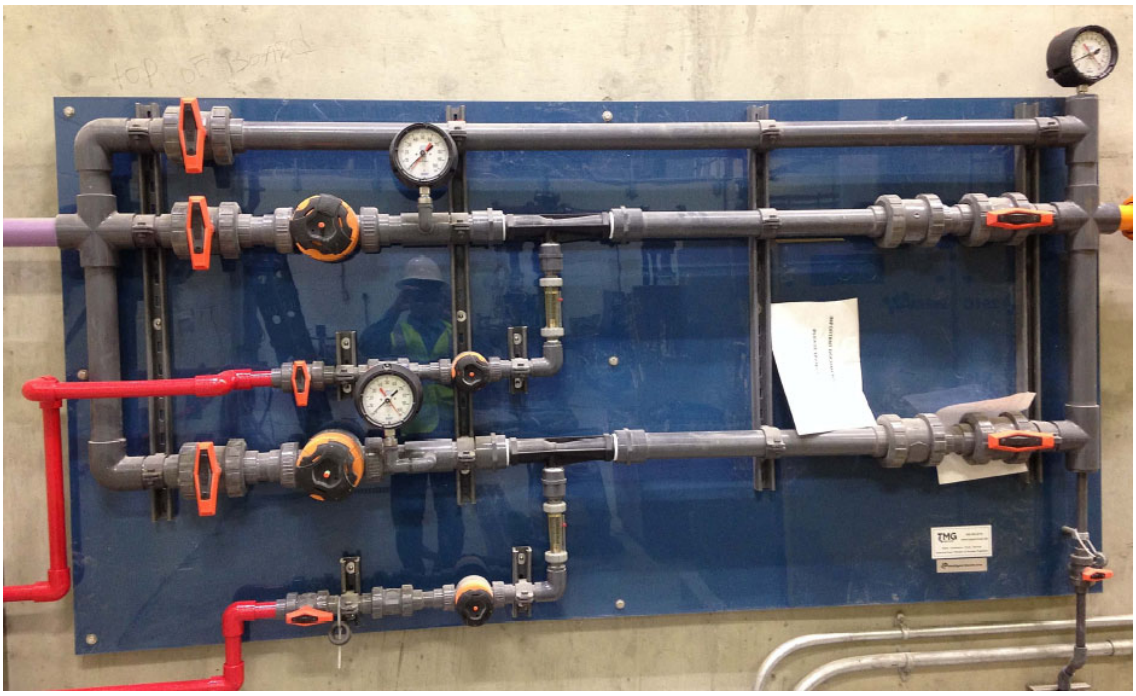

Figure 6: Skid-Mounted Clean-In-Place System

There is no need to drain the tanks or remove the membrane units to perform chemical cleaning. All that is required is stopping the operation, opening a vent, injecting a chemical solution, and allowing that solution to soak in the membrane units for 2 to 4 hours.

Organic fouling can be cleaned with a 0.5% sodium hypochlorite (NaClO) solution. This is typically done two to four times per year. Inorganic fouling such as iron or aluminum can be cleaned by a 1% oxalic or citric acid solution and is typically needed once a year or less. If the residual chemical cannot be discharged from the system, it can be sent back to the raw water inlet or to the bioreactor in order to neutralize the chemical.

Kubota Membrane USA Corporation 2021
This document is the property of KUBOTA Corporation. This document may not be duplicated and/or published without prior written consent of the owner.

This simple and infrequent maintenance cleaning is the only chemical cleaning required; no recovery cleaning is necessary for operation of the Kubota MBR system. Moreover, the Kubota MBR system does not use the backpulse cleaning that is frequently used in hollow fiber MBR systems. This helps reduce the energy requirements and simplifies the piping and operation of the Kubota MBR system when compared with hollow fiber systems.

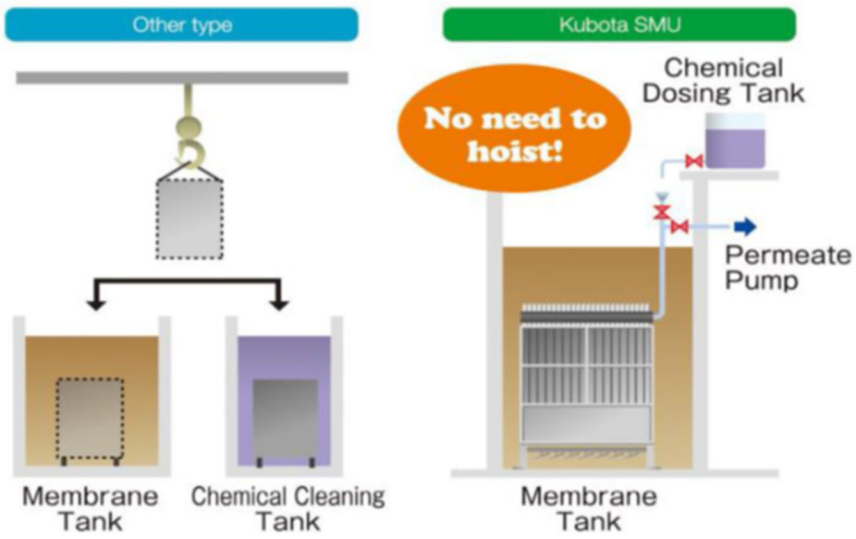

Figure 7: Chemical Cleaning for Other Manufacturers (left) vs. Kubota Membrane Units (right)

4 Design Overview

The MBR system was designed based on the following influent flow data *(Tables 2 and 3)*.

4.1 Influent Design Flow

The flow conditions used for the preliminary design are shown in the table below.

Table 2: Design Flow Conditions

Condition	Flow	Unit
Average Day Flow	38,000	MGD

The wastewater characteristics used for preliminary design were provided to KMU and are listed in the table below.

Kubota Membrane USA Corporation 2021
This document is the property of KUBOTA Corporation. This document may not be duplicated and/or published without prior written consent of the owner.

Table 3: Influent and Effluent Characteristics

Constituent	Max Month Influent Concentration	Required Effluent Concentration
BOD	500 mg/L	< 10 mg/L
TSS	800 mg/L	< 10 mg/L
TKN	95 mg/L	--
TN	--	<10

4.2 MBR Specifications

The proposed MBR system was designed with the capacity of treating the Max Month Flow for up to 3 months and the Peak Day Flow for up to 24 hours.

Table 4: Membrane Equipment Specifications

Component	MBR Specifications
Membrane Model	FS200
Membrane Surface Area per Unit	1722 ft^2
Design MLSS at MBR	12,000 mg/L
Number of Treatment Trains	2 Trains
Number of Membrane Tanks	1 Tank
Total Number of Submerged Membrane Units	2 units
Minimum Wastewater Temperature	12.8 °C (55 °F)

4.3 Preliminary Layout

The proposed MBR system includes 2 biological treatment trains in parallel, each containing a pre-anoxic basin, an aeration basin, and a post-anoxic basin. This will be followed by 1 new membrane tank fed from the post-anoxic basins. Our design calculations indicate additional volume is required for the post-anoxic process zone, so we recommend removing the existing membrane units and installing a mixer to convert that into a third anoxic basin. Then a new MBR basin will be installed after the existing treatment trains. Sludge will be recycled from the MBR to the pre-anoxic zone via a RAS pump. The basic process flow diagram is shown below.

Kubota Membrane USA Corporation 2021
This document is the property of KUBOTA Corporation. This document may not be duplicated and/or published without prior written consent of the owner.

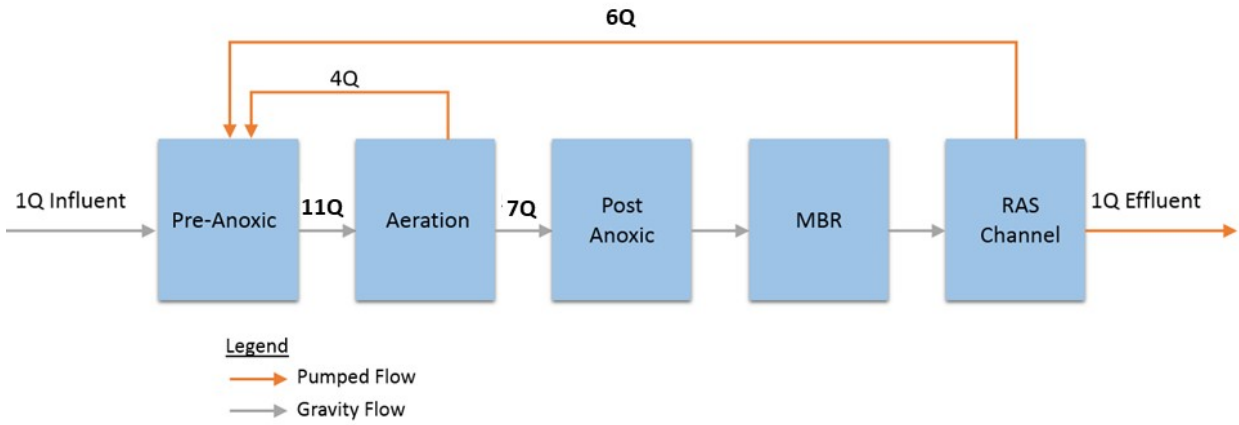

Figure 8: Process Flow Schematic

Preliminary tank sizing was performed using Kubota standard design parameters. Sizing was based on the minimum temperature, and the maximum monthly flow and loading. A summary of the preliminary tank sizes is included below.

Table 5: Tank Dimensions and Hydraulic Retention Times

Tank Name	Appx. Dimensions (L' x W')	SWD (feet)	Tank Vol. (gallons)	Number of Tanks	Total Volume (gallons)	HRT at MMF (hours)
Pre-Anoxic	6' x 6'	--	2,500 gal	2	5,000 gal	3.2 hours
Aeration	8' x 14'	--	9,600 gal	2	19,200 gal	12.1 hours
Post-Aeration (+ existing precast MBR basin)	6' x 6'	--	1,600 gal	3	4,800 gal	3.0 hours
MBR Basin	8' x 14'1"	6'5"	5,540 gal	1	5,540 gal	3.5 hours
TOTAL	-	-	-	-	**34,540 gal**	**21.8 hours**

4.4 Annual Operational Costs

4.4.1 Annual Energy Estimates

Kubota performed an analysis of the proposed system to estimate the energy use during average daily flow. The analysis is based on a diurnal flow pattern, averaging a daily flow of 38,000 gpd to the facility. See Figure 9 below to see the assumed flow profile.[1] The diurnal flow pattern allows the membrane tank to idle during periods of low flow. While in idle mode, the MBR tank will be aerated for 5 minutes and rest for 55 minutes with no permeate pumping.

[1] Metcalf & Eddy Inc., George Tchobanoglous, Franklin L. Burton, Ryujiro Tsuchihashi, and H. David Stensel. 2013. *Wastewater Engineering: Treatment and Resource Recovery*. 5th ed. New York, NY: McGraw-Hill Professional.

Kubota Membrane USA Corporation 2021
This document is the property of KUBOTA Corporation. This document may not be duplicated and/or published without prior written consent of the owner.

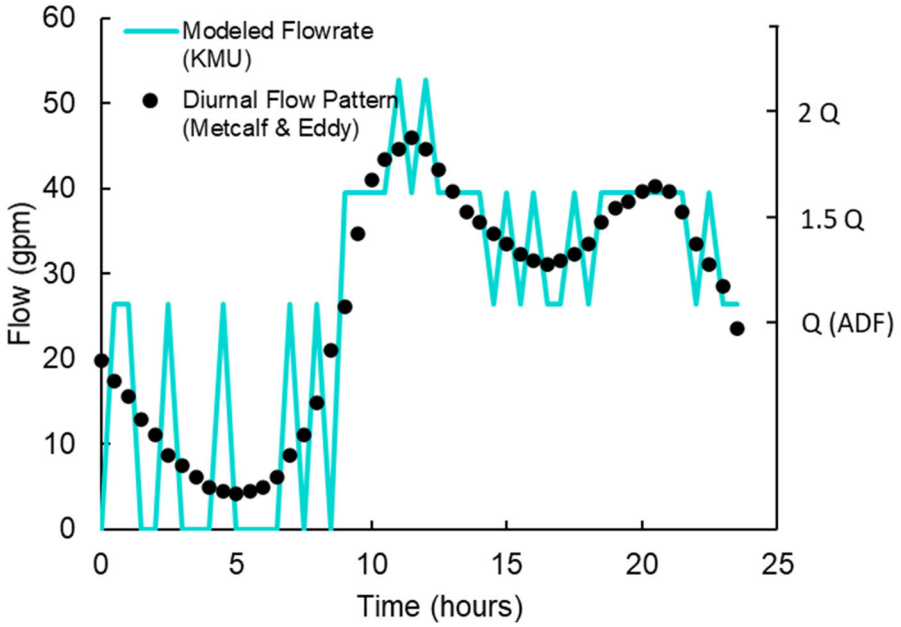

Figure 9: Assumed Diurnal Flow Pattern

Energy use was calculated for the mixers, internal recycle pumps, permeate pumps, RAS and WAS pumps, aeration blower, and MBR air scour blower. Energy use for instrumentation and other ancillary equipment is generally negligible by comparison and is excluded from this analysis. Efficiency ratings for the pumps and blowers used in the calculation were estimated for the specific equipment selected for use on this project.

This analysis predicts that the system will require a total of 273 kWh per day of operation at 0.038 MGD or a rate of 7.18 kWh per thousand gallons treated at this flow. Daily power consumption for major equipment is shown in the table below.

Kubota Membrane USA Corporation 2021
This document is the property of KUBOTA Corporation. This document may not be duplicated and/or published without prior written consent of the owner.

Table 6: Estimated Daily Power Consumption

Equipment	Daily Power Consumption at 0.035 MGD
Pre-Anoxic Mixer	45.6 kWh
Post-Anoxic Mixer	68.4 kWh
Internal Recycle Pump	8.8 kWh
MBR Permeate Pump	6.1 kWh
RAS Pump	13.3 kWh
WAS Pump	0.06 kWh
Aeration Blower	35.9 kWh
MBR Air Scour Blowers	94.6 kWh

4.4.2 Annual Chemical Consumption (CIP)

Organic fouling can be cleaned with a 0.5% sodium hypochlorite (NaClO) solution. This is done with the membranes in place, in the activated sludge, with no need to remove the SMU. Each cleaning event for organic fouling would consume 7.9 gallons of 12.5% NaClO stock solution per FS200 SMU. A total of 15.8 gallons of 12.5% sodium hypochlorite would be consumed each cleaning event and typically hypochlorite cleaning events are performed 2-4 times per year.

Inorganic fouling such as iron or aluminum can be cleaned by a 1% citric acid solution and is typically needed once a year or less. Each cleaning event for organic fouling would consume 3.2 gallons of 50% citric acid stock solution per FS200 SMU. A total of 6.3 gallons of 50% citric acid would be consumed for each cleaning event and typically acid cleaning events are performed once per year.

Kubota Membrane USA Corporation 2021
This document is the property of KUBOTA Corporation. This document may not be duplicated and/or published without prior written consent of the owner.

5 Scope of Supply

The following proposed items will be supplied by Kubota Membrane USA and are included in the budgetary prices that are listed in Section 7. We are flexible in terms of scope of supply though, and are happy to adjust our scope to fit the project's needs.

5.1 Major Equipment and Instrumentation

Table 7: Major Equipment and Instrumentation in Kubota's Scope of Supply

Name	Type	Anticipated Size	HP	Quantity
Pre-Aeration Zone Equipment				
Pre-Anoxic Mixer	Submersible	2,500 gallons	1.7	2 duty
Pre-Aeration Zone Equipment				
Pre-Aeration Diffuser	Fine Bubble	54 scfm	--	2 sets
Pre-Aeration Blower	Positive Displacement	108 scfm 7.1 psig	7.5	1 duty (shared standby with MBR)
Air Flow Meter	Mass Air Flow, Insertion Style	2.5 inch	--	2
Flow Control Valve	Actuated Butterfly Valve	2.5 inch	--	2
DO Meter	LDO Probe and Transmitter	--	--	2
Level Transmitter	Diaphragm	--	--	2
Internal Recycle Pump	Submersible	60 gpm	5	2 duty + 1 shelf spare
Internal Recycle Flow Meter	Electromagnetic	3 inch	--	2
Post-Anoxic Basin				
Anoxic Mixer (retrofit MBR pre-cast basin)	Submersible	1,600 gallons	1.7	3 duty
Membrane Zone Equipment				
Submerged Membrane Unit	Flat Plate	FS200	--	2
SMU Guide and Stabilizer	-	-	--	2 sets
Diffuser cleaning valve	ON/OFF Plug Valve	4 inch	--	1
MBR Blower	Positive Displacement	152 scfm 3.7 psig	5	1 duty + 1 standby
Air Flow Meter	Mass Air Flow, Insertion Style	4 inch	--	1
Level Switch	Float	--	--	1 LL

Kubota Membrane USA Corporation 2021
This document is the property of KUBOTA Corporation. This document may not be duplicated and/or published without prior written consent of the owner.

Name	Type	Anticipated Size	HP	Quantity
Permeate Equipment				
Permeate Pump	Self-Priming Centrifugal	40 gpm	1.5	1 duty + 1 standby
Permeate Flow Meter	Electromagnetic	2 inch	--	1
Permeate Flow Control Valve	Modulating Butterfly Valve	2 inch	--	1
Permeate Turbidity Meter	Laser Meter and Transmitter	--	--	1
Permeate Pressure Transmitter	Diaphragm	--	--	1
RAS Channel Equipment				
RAS Pump	Submersible	160 gpm	5	1 duty + 1 standby
RAS Flow Meter	Electromagnetic	4 inch	--	4
WAS Pump	Submersible	13 gpm	1	1 duty, 1 standby
WAS Pump Flow Meter	Electromagnetic	1 inch	--	1
Other Equipment				
In-Basin Permeate Piping, Excluding Headers	Schedule 80 PVC w/ isolation valve	2.5-inch	--	2 sets
In-Basin Air Scour Drop Piping, Excluding Headers	304 Stainless Steel w/ CI isolation valve	3-inch	--	4 sets
CIP System	Chemical Injection System	--	--	1
External Carbon injection system	Peristaltic pumps, calibration column, injection quill	--	--	1 set
Control Panel, HMI, SCADA	MBR Control Panel	--	--	1

Kubota Membrane USA Corporation 2021
This document is the property of KUBOTA Corporation. This document may not be duplicated and/or published without prior written consent of the owner.

5.2 Direct Services

The following services are included in Kubota's scope of supply:

Design Support

- Support during preliminary and final design.
- Construction submittals including shop drawings.
- Preparation and submittal of a system O&M manual for Kubota supplied systems and equipment.
- Equipment delivery coordination with the contractor.

Commissioning

- 15 days on-site for start-up and commissioning including dry and wet equipment checks, clean water testing, and support during seeding and start-up.
- 5 days on-site for performance testing.
- Additional days are available as needed.

Training

- 3 days of on-site, hands on operator training using a mix of classroom and field time. See Table 8 below for list of training topics.

Table 8: Training and Workshops Included in Kubota's Scope of Supply

Training/Workshop	Brief Summary
SCADA and HMI	1. Navigation of all HMI screens and menus. 2. Review of automatic operations and controls. 3. Changing process set points. 4. Overriding controls from the HMI. 5. Manual operation of the system in the event of a power failure.
CIP training	1. Navigation of CIP (Clean-In-Place), in-situ maintenance chemical cleaning. 2. Control from HMI and operation of manual valve. 3. Adjust set points of chemical flow.
Troubleshooting	1. Case study of troubleshooting 2. Recovery from trouble 3. "Fish bone" approach
Daily testing	1. Filterability test 2. Viscosity measurement

Workshop/Additional Training Available (No Charge)

- In addition to our standard training at commissioning, Kubota Membrane USA will host an annual operator workshop in which operators meet to exchange ideas and learn about the latest developments in MBR technology.
- Customized individual training, such as membrane disassembling training, is also available upon request.

Kubota Membrane USA Corporation 2021
This document is the property of KUBOTA Corporation. This document may not be duplicated and/or published without prior written consent of the owner.

Remote Monitoring Available (No Charge for First Year)

- *Support by Remote Monitoring*
  The Kubota membrane system as proposed includes a SCADA system that can be remotely monitored and controlled, provided wireless connectivity is available. Technical support staff can monitor the status of your system to proactively address potential problems. Whenever a call is placed to our service staff, that person will be able to log in to the SCADA system and easily see what is happening at the plant.

5.3 Exclusions to Kubota Scope of Supply

The following items are not currently included in the Kubota scope of supply:

- Performance and payment bond costs.
- Equipment installation.
- Pretreatment/headworks including coarse screen, fine screen, and grit removal.
  - ✓ Kubota recommends an internally-fed drum screen with perforated openings less than 2-mm, or similar. KMU can provide screens as part of the Scope of Supply at an additional cost.
- Overhead walkways and In-basin structural supports for the Submerged Membrane Units
  - ✓ KMU will provide SMU guide sets as shown in the scope of supply. Guide sets will require a support structure along the top of the tank.
- Seismic bracing for equipment.
  - ✓ KMU can perform the design of seismic bracing and supply bracing for an additional cost.
- Solids handling equipment and digestors.
- Permeate disinfection systems.
- Electrical system including primary and backup power, lighting, HVAC, etc.
- Variable frequency drives (VFDs) and motor controllers.
- Construction of concrete tanks, buildings, and structures.
- MBR air scour and permeate header pipes, and all other piping that is outside of the MBR tanks.
- Civil works including installation, connection of piping, installation of wiring for all Kubota supplied equipment and instrumentation.
- Equipment access platforms, walkways, ladders, or stairs.
- Equipment lifts or hoists.
- Heat tracing materials if needed.

6 Warranty

Equipment Warranty

Kubota's standard 2-year membrane warranty, and 1-year mechanical equipment warranty is included in the main budgetary price proposed (Table 9) and goes into effect at the commencement date of commissioning. The warranty included is a guarantee that the products supplied by Kubota are free from defect in material or workmanship.

Kubota Membrane USA Corporation 2021
This document is the property of KUBOTA Corporation. This document may not be duplicated and/or published without prior written consent of the owner.

7 Budgetary Price

The estimated budgetary price for the equipment and instrumentation described herein is shown below in Table 9. The pricing herein is for budgetary purposes only and does not constitute an offer of sale. Freight, taxes or duties are not included.

Table 9: Budgetary Price for Proposed Kubota MBR Equipment and Equipment

Budgetary Price – MBR Equipment, Instrumentation, and Services	
Budgetary Price	$742,000

8 24/7 Technical Support

24/7 phone support is available in addition to support during regular business hours. 24-hour technical support calls are shared within the Kubota staff so that you can rest assured knowing that knowledgeable engineers and technicians are just a phone call away.

9 Additional Services (Optional)

The following service plans are optional and may be added to Kubota's scope of supply if desired for an additional cost.

Kubota Custom Membrane Support Plan

Kubota can customize your support/service package to meet your needs. The following table shows a variety of our available services:

Table 10: Kubota's Available Services

Service	Note
Periodical technical support	Monthly, Quarterly, Annually
24/7 phone support	
SCADA monitoring	Weekly, Monthly, Quarterly
Periodical site visit	Quarterly, Semi-annually, Annually
Membrane inspection	Annual, Semi-annual, 3x per year
Program (SCADA, etc.) update	Based on hydraulic changes, such as increases in flow or changes in operation.

Kubota Membrane USA Corporation 2021
This document is the property of KUBOTA Corporation. This document may not be duplicated and/or published without prior written consent of the owner.

Amphidrome®*

WASTEWATER TREATMENT SYSTEM
BUDGET PROPOSAL

PROJECT: Bolton, MA WW Study

LOCATION: Bolton, MA
PREPARED FOR: Megan Caless– Wright-Pierce

REVISION: 0 – FLOW 38,000 GPD

DATE: 8/11/2021

*Manufactured under license from De Nora Water Technologies

Megan Caless
Wright-Pierce
Andover, MA Office

RE: Bolton, MA

Dear Megan,

We are pleased to present the preliminary design and budget proposal for an Amphidrome® Wastewater Treatment System for the **Bolton, MA Project.**

<u>The Design Parameters we have used for the facility are summarized below</u>

Table 1

Design Summary

Constituent	Influent	Effluent Requirements
Flow	38000 gpd	
	70,000 gpd	
BOD	500mg/L	≤ 30 mg/L
TSS	500 mg/L	≤ 30 mg/L
TKN	80 mg/L	
TN		≤ 10 mg/L
Fecal		≤ 200

The Amphidrome® system has been used successfully for over **15** years in over **125** applications, from single family installations to small systems with flows in excess of 360,000 gallons per day and can be customized to fit site requirements.

System **Benefits**

Low Visual Site Impact

- System below grade

Low Audible Site Impact

- Kaeser premium sound enclosed blowers

Easy To Operate

- Touch screen with SCADA like equipment screens, data trending and built in troubleshooting guide
- Remote access provided for BOTH control and monitoring

Energy Efficient

- Intermittent aeration - Process air runs 3-5 hours per day at 20-30 Hz
- Backwash blowers run 10 min per day
- Primary and waste solids are digested in anoxic tank – no aeration required

Low Chemical Costs

- Anoxic environment created to denitrify and reclaim alkalinity required for nitrification
- Intermittent aeration provides simultaneous nitrification-denitrification

Consistent Treatment

- Fixed film reactor with high biomass responds well to low and shock loads
- Anoxic tank equalizes mixes and dilutes incoming shock loads of chemicals dumped into the system
- Demonstrated ability to perform with high levels of Oil & Grease (See Chili's Data Appendix A)

Filtered Effluent

- Effluent is filtered through our deep media bed filter

Upgradable

- Easily upgraded for phosphorus reduction without adding additional filtration
- Easily upgraded for UV disinfection by adding an enclosed UV and using the discharge pumps to pump through it.

The process utilizes a biologically active filter (BAF), also referred to as a submerged attached growth bioreactor (SAGB™) because the media is always submerged in the process flow. The three primary advantages of SAGB™s are the high biomass concentrations equivalent to **7,000 – 18,000 mg-VS/l** that may be achieved, biomass is attached to the sand media which means VS will be retained in the reactor at high peak flows and a short hydraulic retention time (HRT), which result when media with a high specific surface area is used. The short HRTs result in compact reactors, which are advantageous when land area is limited. The media also provides physical filtration and therefore, the need for solids separation after the biological treatment process is eliminated.

Media

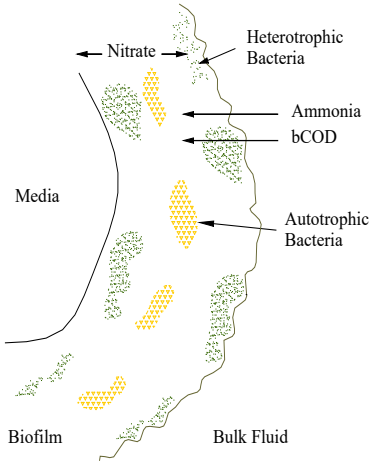

Biofilm

The system includes an anoxic/equalization tank, one clear well, and a BAF. The Amphidrome® system is typically installed underground. The only structure required is a small building for the blowers and control panel.

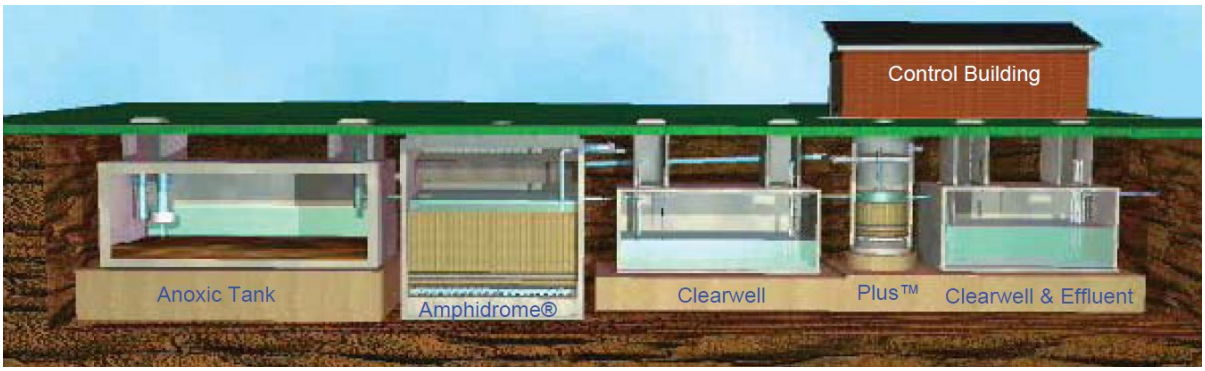

Figure 1. Section View of Amphidrome® System

The reactor consists of: 1) an underdrain, 2) support gravel, 3) filter media, and 4) a backwash trough. The underdrain, located at the bottom of the reactor, can be constructed of

concrete blocks encased with high-density polyethylene and stainless steel piping or entirely out of stainless steel. It provides support for the media and even distribution of air and water into the reactor. The underdrain includes a manifold and laterals to distribute the air evenly over the entire filter bottom. The design allows for both the air and water to be delivered simultaneously--or separately--via individual pathways to the bottom of the reactor.

Concrete Block Underdrain

Underdrain showing Backwash Air Header

On top of the underdrain is 1.51 ft (five layers) of four different sizes of gravel. Above the gravel is a deep bed of coarse, round silica sand media. The media functions as a filter, reducing suspended solids while providing the surface area on which an attached growth biomass can be maintained. The media specific surface area of 250 $ft.^2/ft.^3$ results in a high concentration of biomass within the reactor, which means that the hydraulic retention time (HRT) is short; therefore the reactor requires a significantly smaller volume to treat a given waste strength than would be required by some other reactors.

Reactor Quiescent Flow

Reactor During Backwash

The influent wastewater enters the system through the anoxic/equalization tank, which has an equalization zone, a settling zone, and a sludge storage zone and serves as a primary clarifier for the SAGB™. and is either pumped or flows by gravity to the reactor. The reactor effluent flows into the clearwell through the backwash pump(s). To achieve the required aerobic and anoxic conditions within the biofilm, process air to the reactor is supplied intermittently-via the underdrain at the bottom of the reactor.

An Internal recycle of nitrified effluent is done by periodic returns of the clearwell effluent in an upflow mode through the reactor back to the anoxic tanks carbon rich environment. This provides a level of denitrification and alkalinity recovery.

The cyclical forward and reverse flow of the waste stream and the intermittent aeration of the filter achieve the required hydraulic retention time and create the necessary aerobic and anoxic conditions to achieve the required level of biological nitrogen removal.

Fully nitrified effluent from the Amphidrome® reactor clearwell is pumped to the Amphidrome® Plus™ denitrification filter reactor. The reactor is run in an anoxic mode with carbon addition allowing the biomass to convert the nitrate to carbon dioxide and nitrogen gas.

The reactor is backwashed periodically with both water and air (design is 1x/day).

Controls:
The control system is PLC based with a user-friendly operator touch screen interface

Wireless Process Control Access (WPCA)

Amphidrome systems are now provided with one year of online and phone technical support. The system will be supplied with a WPCA module that will allow the operator and FRMA to log into the system. This allows real time control and observation of the system remotely via the internet. Remote access to stored system trending data, alarm history etc. provides valuable insight on system operation and any adjustments that may need to be made to optimize performance. These adjustments can be made remotely in real time.

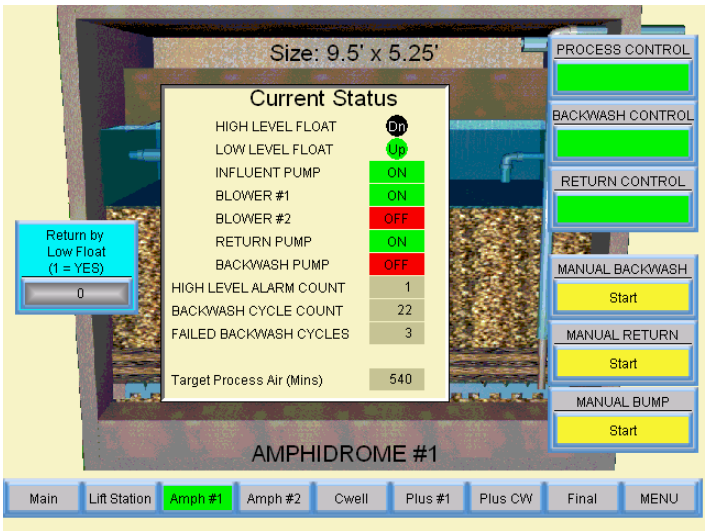

Design

Along with the budget proposal – we attach the process plans for Mashpee Village – the project is similar in size and scope and will give you a good idea of the final changes so to speak of a Wright-Pierce designed facility.

SCENARIO 2 38, 000 GPD

Amphidrome® Reactor

The most cost effective design for this facility are two (2) 9.5 ft. x 10.5 ft. reactors. Each reactor will have an 8.5 ft. bed depth

Amphidrome® Plus™ Reactor

The most cost effective design for this facility is one (1) 6.0 ft. diameter reactors with a bed depth of 5 feet.

See table 2 for Tanks needed and table 3 for operating cots.

Table 2
Tank and Reactor Sizing

Tank	Capacity/Size
Anoxic/Equalization	32,000 gallons (3000 gallons fluctuating volume)
Amphidrome® Reactor	9.5 ft. x 10.5 ft. with 8.5 ft. media (Overall height 16.5 ft.)
Amphidrome® Clearwell	12,500 gallons (working volume)
Amphidrome® Plus™ Reactor	6.0 ft. diameter with 5 ft. media (Overall height 13 ft.)
Amphidrome® Plus™ Clearwell/ Final Effluent	8,200 gallons (working volume)

Process Flow Schematic

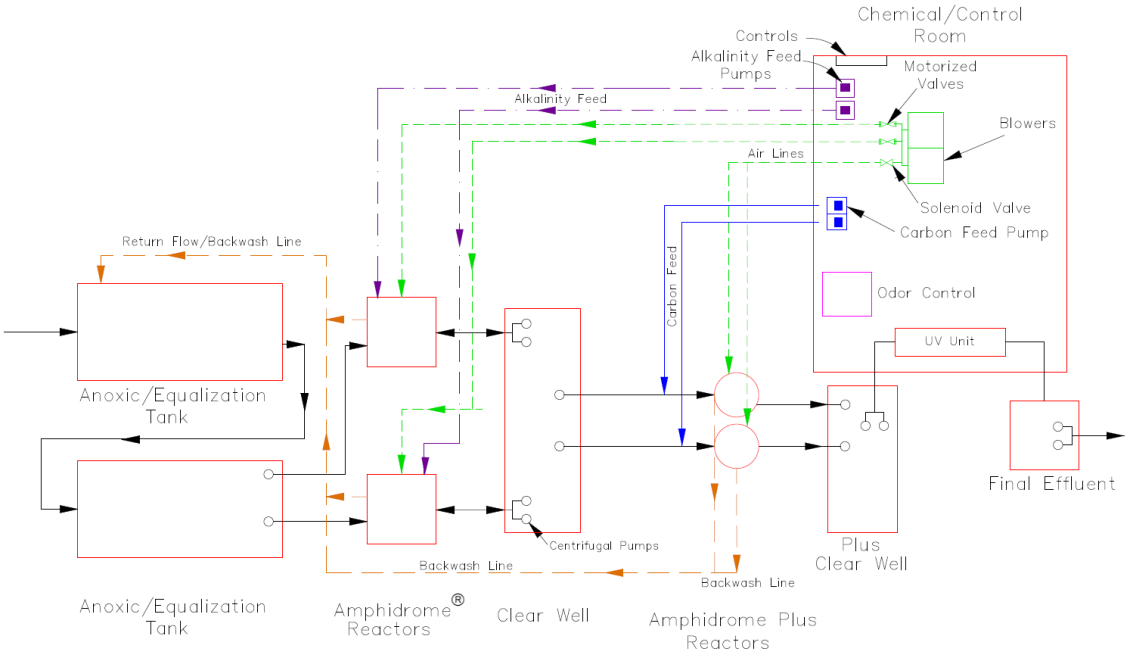

Existing Tankage can be re-purposed. The Flow Equalization Tank and the Two (2) Aerobic Tank equate to a total volume of 39,200 that would fit nicely into the minimum Anoxic volume of 32,000 gallons required. The Final Effluent pump chamber can be re-purposed as one of the required cleawells.

Existing Tankage				
Tank	**Quantity**	**Model**	**Capacity**	**Re-Purpose**
Flow Equalization Tank	1	Rotondo LWT 9x10-20	20,000 gallons	Anoxic Volume
Pre Anoxic Tank	2	Rotondo PC 6x6	2,500 gallons	
Aerobic Tank	2	Rotondo PC 8x14	9,600 gallons	Anoxic Volume
Post Anoxic Tank	2	Rotondo PC 6x6	1,600 gallons	
Membrane Dosing Chamber	1	Rotondo PC 6x8	1,600 gallons	
Final Effluent Pump Chamber	1	Rotondo LWT 8x10-15	15,000 gallons	Amphidrome Clearwell

Table 3
Estimated Annual Operating Costs*

Blowers	**Pumping**	**Alkalinity** 100 lbs/week	**Carbon Source**	**Sludge Removal** (1.5%) : 148,000 gallons/year @ $0.15/gal
$2,200	**$2,600**	**$2,500**	**$3,500**	**$22,200**

***electricity Costs @ $0.12 / kWh:**

Table 4

Scope of Supply

MAJOR COMPONENTS	Quantity	MANUFACTURER
Amphidrome® Reactor Internals	Two (2)	DNWT
Amphidrome® Plus Reactor Internals	One (1)	DNWT
Stilling Well for Anoxic Tank	One (1)	FRMA
Amphidrome® feed pumps	Not Included	HOMA
Return Flow and Backwash Pumps	Four (4)	HOMA
Amphidrome® Plus feed pumps	Two (2)	HOMA
Plus Backwash Pump	One (1)	HOMA
Final Discharge Pumps	Two (2)	HOMA
Base elbows and guide brackets for all pumps	Included	HOMA
50 foot cord length for pumps and floats	Included	HOMA
Required Float switches and stainless brackets	Included	CSI
Kaeser Sound attenuated blowers	Two (2)	Kaeser
Variable Frequency Drives for blowers	Two (2)	DuraPulse
Control Panel with Touch screen And Remote Wireless Access	Included	FRMA
Disconnect junction boxes for all pumps and floats	Included	FRMA
Flow Meter and flow computer	Included	Seametrics
Alkalinity Feed Pump Tank & Agitator	Included	LMI
Alkalinity Feed Pump	Two (2)	Stenner
Carbon Feed Pump	Two (2)	Stenner
Odor Control with VFD	Included	PureAIR Filtration
UV Disinfection	Included	Aqua Azul

The tanks, control building, external piping, and installation are to be provided by others. FRMA will provide assistance with the design and review the contract drawings and provide assistance during installation and start-up to ensure that a complete system is provided.

AMPHIDROME® PLUS™ BUDGET PRICING

Budget: $416,000

Inclusive of freight & startup assistance and *exclusive of any applicable taxes*

See appendix C – payment terms

Very truly yours,

Henry Albro

frma /advanced treatment solutions
273 Weymouth Street • Rockland, MA 02370
www.amphidrome.com

Appendix A

Chili's Restaurant

Hingham, MA

Design Flow 8,000 gpd

This single reactor Amphidrome® system provided exceptional treatment with high concentrations of Fats, Oils, and Grease

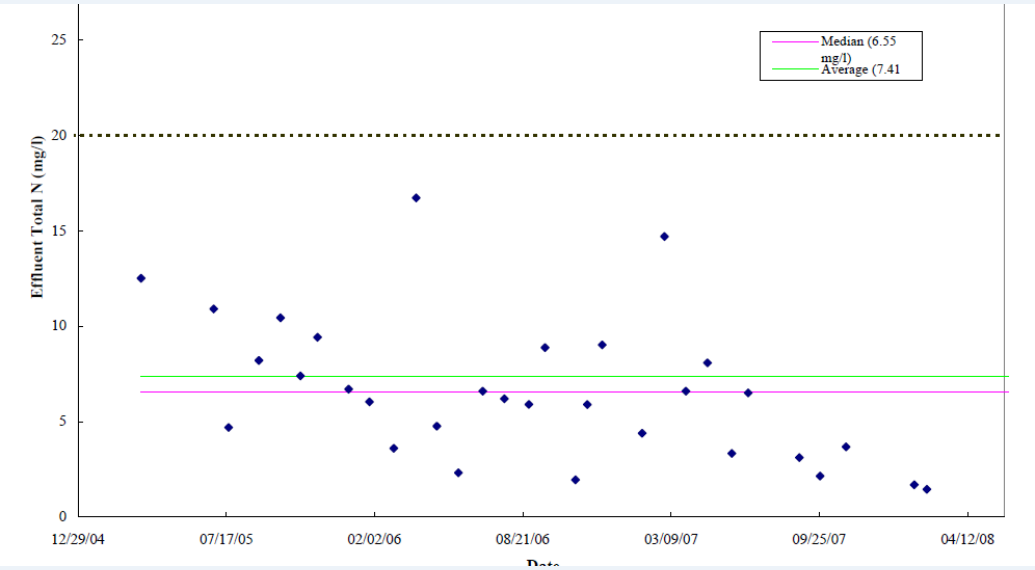

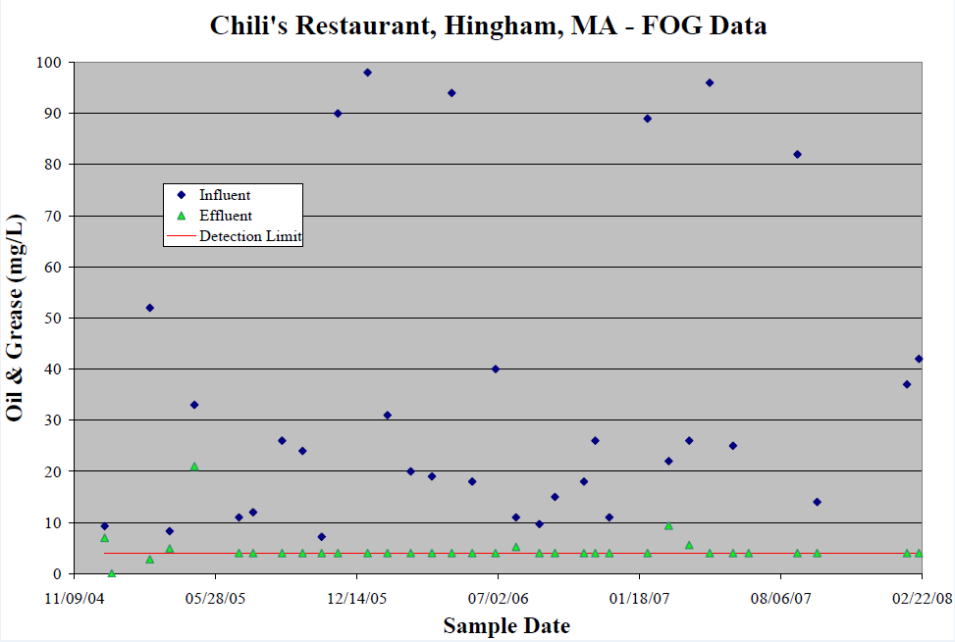

Appendix B

EQUIPMENT WARRANTY

F. R. Mahony and Associates, Inc. (FRMA) warrants to the original purchaser and the end user all new equipment manufactured by it to be free from defects in material and workmanship, and at the election of FRMA, Inc. will repair or replace, f.o.b. its factories or other locations designated, and as determined by FRMA any part or parts returned to it, transportation/freight prepaid, which examination shall show to have failed under normal use and service by the original user within one (1) year following start-up or (18) months from shipment, whichever occurs first. Such repair or replacement shall be free of charge except for freight and those parts such as media, chemicals, oil, grease, belts and like that are consumable under normal use. FRMA's obligation under this warranty is conditioned upon it receiving prompt written notice within 30 days of claimed defects during the one year warranty period. Discovery thereof during the one year warranty period is limited to repair or replacement as aforesaid. No allowance will be made for labor, transportation, or other charges incurred in the replacement of repaired defective parts and/or equipment furnished.

THIS WARRANTY, INCLUDING THE STATED REMEDIES, IS EXPRESSLY MADE BY FRMA AND IS ACCEPTED BY ORIGINAL PURCHASER IN LIEU OF ALL OTHER WARRANTIES, INCLUDING WARRANTIES OF MERCHANTABILITY AND FITNESS FOR PARTICULAR PURPOSE, WHETHER WRITTEN, ORAL, EXPRESS, IMPLIED OR STATUTORY. FRMA NEITHER ASSUMES NOR AUTHORIZES ANY OTHER PERSON TO ASSUME IT FOR ANY OTHER LIABILITIES WITH RESPECT TO ITS EQUIPMENT. FRMA SHALL NOT BE LIABLE FOR NORMAL WEAR AND TEAR, NOR FOR ANY INCIDENTAL OR CONSEQUENTIAL DAMAGE DUE TO INOPERABILITY OF ITS EQUIPMENT FOR ANY REASON NOR ON ANY CLAIM THAT ITS EQUIPMENT WAS NEGLIGENTLY DESIGNED OR MANUFACTURED.

This warranty shall not apply to equipment or parts thereof which have been altered or repaired outside of FRMA factory or damaged by improper installation, storage, application, erosion, or corrosion of any sort, or subjected to misuse, abuse, neglect, or accident. This warranty is null and void if payment is delayed, not made, or if not in accordance with the terms and conditions of FRMA equipment proposal.

FRMA makes no warranty with respect to parts, accessories, or components manufactured by others. The warranty applicable to such items is that offered by their respective manufacturers.

Appendix C

TERMS AND CONDITIONS

Terms and Conditions for the equipment supplied by F.R. Mahony are stated below and attached.

Unless indicated, the quoted price does not include any local, state or federal taxes, permits or other fees. Any taxes or fees that may apply must be added to the quoted price and paid by the buyer.

If the project is tax exempt a tax exemption certificate must be included with a purchase order.

MECHANICAL SHOP DRAWINGS

Mechanical shop drawings are estimated to be completed three (3) to four (4) weeks after receipt of purchase order. Control System shop drawings are estimated to be completed six (6) to eight (8) weeks after receipt of purchase order.

TERMS OF PROGRESS PAYMENTS

Payment of all invoices is due within 10 days of invoice date. Payment must be received prior to next manufacturing step as follows**:**

- 10% of purchase price with purchase order to FRMA.
- 15% of the purchase price with return of approved shop drawings.
- 50% upon completion of manufacture.
- 20% upon delivery.
- 5% upon successful operation of the equipment.

If payment for steps two (2) and three (3) is precluded without a schedule of values, a schedule of values will be established and invoiced based on the above payment terms. Prior written notice must be received by FRMA.

If payment is withheld because of failure of the equipment to perform or to comply with the order, a written statement describing such failure shall be made within 10 days of date on which equipment is declared by the owner or engineer not to perform and/or comply with the order.

Unless indicated, the quoted price does not include any local, state or federal taxes, permits or other fees. Any taxes or fees that may apply must be added to the quoted price and paid by the buyer.

PURCHASER ACKNOWLEDGEMENT

Company Name_____

Signed By_____Date_____
Title_____

Terms and Conditions

1. **PRODUCTS:** Products (parts, components, items, materials, assemblies) herein are of the Manufacturer's standard or available construction and specifications. It is Buyer's final responsibility to determine if these products satisfactorily meet Buyer's or Buyer's customer's plans, specifications and requirements. Weights and dimensions when given are approximate unless certified in writing by the Manufacturer.
2. **SELECTION AND END USE:** Seller is not in any way liable for selection, application, or suitability of products herein for any particular use or for any installation or operational costs incurred with these products, all of the aforesaid being the final responsibility of Buyer.
3. **QUOTATIONS:** Seller as a service to Buyer may quote orally or in writing from time to time current prices then in effect for products or services offered for sale by Seller; however, such prices are subject to change without notice. Quotations may be withdrawn at any time prior to actual receipt by Seller of a written purchase order and release from Buyer to manufacture and/or ship the products or perform the services described herein. Quotations shall become null and voidupon the elapse of thirty (30) days from the date of quotation unless earlier withdrawn. Seller does not assume any responsibility for any variation in quantity or omission of any item in any quotation that may be required by any plan or specification or otherwise. Seller is not responsible for any typographical errors or reproduction deficiencies. Quotations for the Quantities, Products and Services described herein are subject to these Terms and Conditions only; Seller will only accept orders on these exact Terms, Conditions and Provisions and no inconsistent terms, conditions, provisions or modifications will be agreed to unless specifically approved in writing by an officer of Seller.
4. **PURCHASE ORDERS AND ACCEPTANCE:** Purchase orders of Buyer resulting from oral or written quotations of Seller shall be subject to the Quantities, Products and Services herein, these Terms and Conditions, and the written approval signed by an authorized representative of Seller in the Seller's acknowledgement. Any term(s), condition(s) or provision(s) of Buyer's purchase order which are inconsistent with these stated herein, shall not be binding on Seller and shall not be considered applicable to the sale or shipment of the products or performance of the services described herein. Unless Buyer shall notify Seller in writing to the contrary as soon as practical after receipt of Seller's acknowledgement, acceptance of Seller's Terms and Conditions hereof by Buyer shall be presumed and, in the absence of such notification, Buyer's oral or written release to manufacture and/or ship the products or perform the services described herein, shall be conclusively deemed as Buyer's acceptance of these Quantities, Products, Services, Terms and Conditions herein. If Buyer notifies Seller in writing of his objections to any of the Terms, Conditions and Provisions described herein, such objections are not accepted by Seller unless specifically accepted in writing signed by an officer of Seller. Seller's responsibility is limited solely to the furnishing of the products or services described herein and assumes no responsibility for any other or further requirements or conditions expressed in any plan, specification, purchase order or other document.
5. **SUBMITTAL:** If Specifically requested in writing by Buyer at the time of purchase order, Seller will prepare submittal data (product bulletins, descriptive data, curves, diagrams, each independently as required) for written approval, corrections, or rejection by Buyer, Buyer's customer or Buyer's customer's authorized representative. Any changes in the submitted products required by the approving authority will be at the Buyer's expense and supported by a written change order in accordance with Sellers Terms and Conditions. In case of dispute between Buyer and Seller of required changes or rejection of the products herein, either Buyer or Seller may cancel this contract in writing to the other without penalty, unless Buyer has previously released to manufacture and/or ship the products in question, which in such case Buyer will be fully responsible for the products and all payments as if a submittal had not been requested. In no case will Seller be obligated to offer for sale or furnish any modified or alternate products to those described herein.
6. **TIME OF SHIPMENT:** Stated shipping dates are approximate. Seller shall not be liable or subject to any special or consequential damages for failure to deliver or delays in delivery occasioned by causes beyond Seller's control, including, but not limited to, strikes, lockouts, fires, inability to obtain materials or shipping space, breakdowns, delays of carriers or suppliers and governmental acts and regulations.
7. **DELIVERY AND FREIGHT:** Delivery of these products shall be F.O.B. the place of shipment to Buyer. Thereafter Buyer assumes full responsibility for any damage or loss irrespective of Seller's prepayment of freight charges. Buyer shall furnish at Buyer's expense, labor and equipment necessary to expeditiously unload products delivered by Seller. Any expenses incurred by Seller due to the delay in unloading shall be reimbursed to Seller by Buyer.
8. **STORAGE:** A product held in storage for the convenience of Buyer will be invoiced to Buyer as if the products were shipped and Buyer agrees to pay for same plus additional reasonable storage charges in accordance with the following payment terms.
9. **PAYMENT:** Buyer agrees to pay Seller within thirty (30) days of invoice date. If Seller has not received payment within these thirty (30) day terms, Seller may add and receive payment from Buyer

interest charges at the rate of 1½% per month on unpaid balance plus such other reasonable collection costs and expenses incurred including attorney's fees, collections fees, court costs and otherwise. Cash or anticipation discounts are not offered unless specifically stated on Seller's invoice, no discounts are allowed on freight, shipping, taxes or interest charges. Cash discounts offered for early payment are earned only when payment is received in the office of Seller on or before the specified discount terms or date. Seller reserves the right to make partial invoices(s) for storage, shipments or services performed and receive payment in accordance with the above terms. Buyer agrees not to make any deductions for taxes, freight, retainages, alleged damages or otherwise from any payments due herein. Payment by credit card may incur a 4% fee.

10. **TAXES:** Buyer shall pay in addition to the purchase price and other charges herein, all excise, sales, privilege, use or other taxes, Federal, State, Local or Foreign, payable by Seller because of the execution of this contract.
11. **CREDIT AND DEFAULT:** If financial responsibility of Buyer becomes impaired or unsatisfactorily in the sole judgment of Seller under this or any other contract between the parties, advance cash payments or satisfactory security shall be given by Buyer upon demand by Seller and any shipments due under this or any contract may be withheld until all payments due are received in full and Buyer's credit has been re-established satisfactorily in the sole judgment of Seller. In addition to all other remedies, in the event of default by Buyer under the terms of this agreement, Seller shall have the right to take exclusive possession of the products sold herein wherever found and to remove same without legal process, any payments having been made on account thereof to be retained by Seller as liquidated damages; or Seller may, in addition to all other remedies available to it, if it deems said products are not readily removable or resalable, sue for and collect any unpaid payments including interest charges, plus such other costs and expenses as Seller has incurred or may incur which shall become immediately due and payable upon Buyer's default of any of the terms of this contract, said remedies to be cumulative.
12. **WARRANTIES:** There is NO WARRANTY, representation or condition OF ANY KIND, EXPRESS OR IMPLIED (INCLUDING NO WARRANTY OF MERCHANTABILITY OR OF FITNESS FOR ANY PARTICULAR PURPOSE) by Seller regarding the products herein; Buyer is solely limited to the Manufacturer's express written warranty, copies of which will be furnished to Buyer upon request. No warranty conditions will be considered until payment of this contract has been made in full.
13. **SELLER'S LIABILITY:** Seller's liability shall be limited to the stated selling price of any defective product and in no event shall Seller be liable for prospective profits or special, direct, indirect or consequential damages of any kind caused by a product, component or part failure. Buyer assumes all risk and liability for loss, damage or injury to persons or property of Buyer or others arising out of the use or possession of any product, component or part herein.
14. **RETURNS:** Products purchased herein may not be returned without the express written permission of Seller, as evidenced by Seller's or Manufacturer's properly authorized return material form, of which a copy must accompany the returned material. Authorized returns shall be shipped at the expense and liability of Buyer to the destination specified by Seller. Such returns are accepted by Seller or Manufacturer for inspection only; any allowance or credit originates with the Manufacturer subject to charges for freight, handling, inspection, repair, restocking and otherwise. Damaged, installed, used or special orderproducts are not returnable. Seller or Manufacturer will not accept debit charges from Buyer for returned products.
15. **SERVICE:** Seller does not include any field or shop labor or service equipment and/or materials for the products herein unless specifically stated as an item in the body of this contract. Any service requested in addition to that not included in the body of this contract will be considered a separate contract and require a separate purchase order from Buyer. No service requests will be accepted or performed when Buyer's account is past due according to the payment terms herein.
16. **CHANGE, MODIFICATION, CANCELLATION:** This contract cannot be changed, modified or cancelled except by written agreement executed by Buyer and an officer of Seller.
17. **JURISDICTION:** This agreement shall be governed and construed in accordance with the laws of the State of Maryland.

AQUA-AEROBIC SYSTEMS, INC.
A Metawater Company

Process Design Report

BOLTON WWTP, MA

Design# 165326

Option: Preliminary Design

AquaSBR®

Sequencing Batch Reactor

August 20, 2021

Designed By: Nicholas Fortsas

6306 N. Alpine Rd Loves Park, IL 61111
(815) 654-2501 www.aqua-aerobic.com

© 2021 Aqua-Aerobic Systems, Inc

Design Notes

Upstream Recommendations

- Neutralization is required ahead of the biological system if the pH is expected to fall outside of 6.5-8.5 for significant durations.

- Coarse screening and grit removal is recommended (by others) ahead of the biological system.

- Elevated concentration of hydrogen sulfide can be detrimental to both civil and mechanical structures. If anaerobic conditions exist in the collection system, steps should be taken to eliminate hydrogen sulfide prior to the treatment system.

Flow Considerations

- The maximum flow, as shown on the design, has been assumed as a hydraulic maximum and does not represent an additional organic load.

- The flow pattern is assumed to occur 8 hours/day over 5 days/week with no flow on weekends.

Biological Process

- The decanter performance is based upon a free-air discharge following the valve and immediately adjacent to the basin. Actual decanter performance depends upon the complete installation including specific liquid and piping elevations and any associated field piping losses to the final point of discharge. Modification of the high water level, low water level, centerline of discharge, and / or cycle structure may be required to achieve discharge of full batch volume based on actual site installation specifics.

Aeration

- The aeration system has been designed to provide 1.25 lbs. O2/lb. BOD5 applied and 4.6 lbs. O2/lb. TKN applied at the design average loading conditions, while maintaining a residual DO concentration of 2.00 mg/l.

- Depending on the actual yard piping from the blowers to the diffuser system and the heat losses associated with the yard piping, additional provisions for cooling of the air (i.e. incorporating heat exchangers) and/or modification of in-basin piping and/or diffuser sleeve material may be required. Aqua-Aerobic Systems, Inc. may need to modify the following equipment offering to ensure compatibility of all in-basin components with actual air temperatures.

Process/Site

- The following parameters have been assumed, as displayed on the design (engineer to verify): Elevation, ambient temperatures.

- The anticipated effluent nitrogen requirement is predicated upon an influent waste temperature of 12.8 °C or greater. While lower temperatures may be acceptable for a short-term duration, nitrification and (if required) denitrification below 10 °C can be unpredictable, requiring special operator attention.

- Sufficient alkalinity is required for nitrification, as approximately 7.1 mg alkalinity (as CaCO3) is required for every mg of NH3-N nitrified. If the raw water alkalinity cannot support this consumption, while maintaining a residual concentration of 50 mg/l, supplemental alkalinity shall be provided (by others).

- The average and maximum design flow and loading conditions, shown within the report, are based on maximum month average and maximum day conditions, respectively.

Post-Secondary Treatment

-The following processes follow the Biological process:
    - Effluent flow equalization.

Equipment

- Changes in basin geometry may require alterations in the equipment recommendation.

- The basins are not included and shall be provided by others.

- Influent is assumed to enter the reactor above the water level, away from the decanter, and to avoid splashing or direct discharge in the immediate vicinity of other equipment. If the influent enters the basin below the water level, adequate hydraulic capacity shall be made in the headworks to prevent backflow from one reactor to the other during transition of influent.

- Based on the process requirements and selected equipment, the reactor wall height should be at least 19 ft in the biological system.

- Scope of supply includes freight, installation supervision and start-up services.

- Equipment selection is based upon the use of Aqua-Aerobic Systems' standard materials of construction and electrical components, suitable for non-classified electrical environments.

- The basin dimensions reported on the design have been assumed based upon the required volumes and assumed basin geometry. Actual basin geometry may be circular, square or rectangular with construction materials including concrete or steel.

- The control panel does not include motor starters or VFDs, which should be provided in a separate MCC (by others).

- Provisions should be made, by others, for overflows in each of the recommended basins.

- Aqua-Aerobic Systems, Inc. is familiar with various “Buy American” Acts (i.e. AIS, ARRA, Federal FAR 52.225, EXIM Bank, USAid, PA Steel Products Act, etc.). As the project develops Aqua-Aerobic Systems can work with you to ensure full compliance of our goods with various Buy American provisions if they are applicable/required for the project. When applicable, please provide us with the specifics of the project’s “Buy American” provisions.

AquaSBR - Sequencing Batch Reactor - Design Summary

DESIGN INFLUENT CONDITIONS

Avg. Design Flow	= 0.038 MGD	= 144 m3/day
Max Design Flow	= 0.057 MGD	= 216 m3/day

DESIGN PARAMETERS

	Influent	mg/l	Effluent Required	<= mg/l	Effluent Anticipated	<= mg/l
Bio/Chem Oxygen Demand:	BOD5	500	BOD5	30	BOD5	30
Total Suspended Solids:	TSS	500	TSS	30	TSS	30
Total Kjeldahl Nitrogen:	TKN	60	--	--	--	--
Oxidized Nitrogen:	--	--	NOx-N	10	NOx-N	10
Total Nitrogen:	--	--	TN	10	TN	10

SITE CONDITIONS

	Maximum		Minimum		Elevation (MSL)
Ambient Air Temperatures:	90 F	32.2 C	17 F	-8.3 C	180 ft
Influent Waste Temperatures:	68 F	20.0 C	55 F	12.8 C	54.9 m

SBR BASIN DESIGN VALUES

			Water Depth			Basin Vol./Basin		
No./Basin Geometry:	= 2 Rectangular Basin(s)		**Min**	= 12.8 ft	= (3.9 m)	**Min**	= 0.022 MG	= (82.8 m³)
Freeboard:	= 2.0 ft	= (0.6 m)	**Avg**	= 15.6 ft	= (4.8 m)	**Avg**	= 0.027 MG	= (100.8 m³)
Length of Basin:	= 19.0 ft	= (5.8 m)	**Max**	= 17.0 ft	= (5.2 m)	**Max**	= 0.029 MG	= (109.8 m³)
Width of Basin:	= 12.0 ft	= (3.7 m)						

Number of Cycles:	= 4 per Day/Basin (advances cycles beyond MDF)	
Cycle Duration:	= 6.0 Hours/Cycle	
Food/Mass (F/M) ratio:	= 0.097 lbs. BOD5/lb. MLSS-Day	
MLSS Concentration:	= 4500 mg/l @ Min. Water Depth	
Hydraulic Retention Time:	= 1.401 Days @ Avg. Water Depth	
Solids Retention Time:	= 11.9 Days	
Est. Net Sludge Yield:	= 0.853 lbs. WAS/lb. BOD5	
Est. Dry Solids Produced:	= 135.2 lbs. WAS/Day	= (61.3 kg/Day)
Est. Solids Flow Rate:	= 40 GPM (1621 GAL/Day)	= (6.1 m³/Day)
Decant Flow Rate @ MDF:	= 158 GPM (as avg. from high to low water level)	= (10.0 l/sec)
LWL to CenterLine Discharge:	= 1.0 ft	= (0.3 m)
Lbs. O2/lb. BOD5	= 1.25	
Lbs. O2/lb. TKN	= 4.60	
Actual Oxygen Required:	= 286 lbs./Day	= (129.5 kg/Day)
Daily Max. Month Avg. Estimated Power*:	= 382.7 KW-Hrs/Day	

* Power consumption calculations in this document are based on Maximum Month conditions. See Power vs. Loading calculations for detailed power consumption and annual average power requirement.

POST-SBR EQUALIZATION DESIGN PARAMETERS

Avg. Daily Flow (ADF):	= 0.038 MGD	= (144 m³/day)
Max. Daily Flow (MDF):	= 0.057 MGD	= (216 m³/day)
Decant Flow Rate from (Qd):	= 158 gpm	= (0.6 m³M)
Decant Duration (Td):	= 45 min	
Number Decants/Day:	= 8	
Time Between Start of Decants:	= 180 min	

POST-SBR EQUALIZATION VOLUME DETERMINATION

The volume required for equalization/storage shall be provided between the high and the low water levels of the basin(s). This Storage Volume (Vs) has been determined by the following:

Vs = [(Qd -(ADF x 694.4)] x Td = 5,922.6 gal = (791.7 ft³) = (22.4 m³)

The volumes determined in this summary reflect the minimum volumes necessary to achieve the desired results based upon the input provided to Aqua. If other hydraulic conditions exist that are not mentioned in this design summary or associated design notes, additional volume may be warranted.

Based upon liquid level inputs from each SBR reactor prior to decant, the rate of discharge from the Post-SBR Equalization basin shall be pre-determined to establish the proper number of pumps to be operated (or the correct valve position in the case of gravity flow). Level indication in the Post-SBR Equalization basin(s) shall override equipment operation.

POST-SBR EQUALIZATION BASIN DESIGN VALUES

No./Basin Geometry:	= 1 Rectangular Basin(s)				
Length of Basin:	= 12.0 ft	= (3.7 m)			
Width of Basin:	= 7.5 ft	= (2.3 m)			
Min. Water Depth:	= 0.0 ft	= (0.0 m)	**Min. Basin Vol. Basin:**	= 0.0 gal	= (0.0 m³)
Max. Water Depth:	= 9.0 ft	= (2.4 m)	**Max. Basin Vol. Basin:**	= 5,922.6 gal	= (22.4 m³)

POST-SBR EQUALIZATION EQUIPMENT CRITERIA

Max. Flow Rate Required Basin:	= 40 gpm	= (0.150 m³/min)
Avg. Power Required:	= 3.0 kW-hr/day	

AquaSBR

Influent Valves

2 Influent Valve(s) will be provided as follows:

- 3 inch electrically operated plug valve(s).

Transfer Pumps/Valves

2 Submersible pump assembly(ies) consisting of the following items:

- 2.4 HP Submersible Pump(s) with painted cast iron pump housing, discharge elbow, and multi-conductor electrical cable.
- 3 inch diameter plug valve(s).
- 3 inch diameter swing check valve.
- Guide bar(s).
- Galvanized upper guide bar bracket(s).

AquaCam-D

2 AquaCAM-D Assembly(ies) consisting of:

- 15 HP Aerator/Mixer/Decanter(s) with fiberglass floats, painted steel power section, and 304 stainless steel restrained mooring frame and weir.
- Aluminum band clamp heater integral to the decanter power section(s).
- 4 inch diameter decant hose assembly.
- 4" schedule 40 galvanized restrained mooring post(s) with base plate.
- #10 AWG four-conductor electrical service cable(s).
- #14 AWG ten-conductor electrical service cable(s).
- 4 inch electrically operated butterfly valve(s) with actuator.

Level Sensor Assemblies

2 Pressure Transducer Assembly(ies) each consisting of:

- Submersible pressure transducer(s).
- Mounting bracket weldment(s).
- Transducer mounting pipe weldment(s).

2 Level Sensor Assembly(ies) will be provided as follows:

- Float switch(es).
- Float switch mounting bracket(s).
- Stainless steel anchors.

Instrumentation

2 Dissolved Oxygen Assembly(ies) consisting of:

- Thermo Fisher RDO dissolved oxygen probe with electric cable. Probe includes stainless steel stationary bracket and retrievable pole probe mounting assembly.
- Thermo Fisher AV38 controller and display module(s).

AquaSBR: Post-Equalization

Transfer Pumps/Valves

2 Submersible pump assembly(ies) consisting of the following items:

- 2.4 HP Submersible Pump(s) with painted cast iron pump housing, discharge elbow, and multi-conductor electrical cable.
- 3 inch diameter plug valve(s).
- 3 inch diameter swing check valve.
- Guide bar(s).
- Galvanized upper guide bar bracket(s).

Level Sensor Assemblies

1 Pressure Transducer Assembly(ies) each consisting of:

- Submersible pressure transducer(s).
- Mounting bracket weldment(s).
- Transducer mounting pipe weldment(s).

1 Level Sensor Assembly(ies) will be provided as follows:

- Float switch(es).
- Float switch mounting bracket(s).
- Stainless steel anchors.

Controls

Controls wo/Starters

1 Controls Package(s) will be provided as follows:

- NEMA 12 panel enclosure suitable for indoor installation and constructed of painted steel.
- Fuse(s) and fuse block(s).
- Compactlogix Processor.
- Operator interface(s).
- Remote Access Ethernet Modem.

20-YEAR O&M ESTIMATE

AQUA-AEROBIC SYSTEMS, INC.
A Metawater Company

BOLTON WWTP, MA

Design#: 165326

Option: Preliminary Design

Designed By Nicholas Fortsas on Friday, August 20, 2021

Prepared By Nicholas Fortsas on Thursday, August 26, 2021

The enclosed information is based on preliminary data which we have received from you. There may be factors unknown to us which would alter the enclosed recommendation. These recommendations are based on models and assumptions widely used in the industry. While we attempt to keep these current, Aqua-Aerobic Systems, Inc. assumes no responsibility for their validity or any risks associated with their use. Also, because of the various factors stated above, Aqua-Aerobic Systems, Inc. assumes no responsibility for any liability resulting from any use made by you of the enclosed recommendations.

© 2021 Aqua-Aerobic Systems, Inc. CONFIDENTIAL

O&M NOTES

* This is based upon operation at 100% of design conditions.

** The values listed are for estimating purposes only. The actual amount of operator attention provided will be dependent upon local requirements and the size of the staff available for testing.

All estimates are based upon equipment maintenance and operation in accordance with the O & M instructions provided by Aqua-Aerobic Systems. They are based on typical SBR installations with a normal preventative maintenance schedule for the equipment. The actual maintenance man hours required for each project will vary depending upon site and climate conditions, which may alter the frequency of the maintenance schedule.

© 2021 Aqua-Aerobic Systems, Inc. CONFIDENTIAL

Biological Estimated Operation & Maintenance Costs

Design#: 165326

Project: **BOLTON WWTP, MA**

Option: **Preliminary Design**

Designed by Nicholas Fortsas on Friday, August 20, 2021

AQUA-AEROBIC SYSTEMS, INC.
A Metawater Company

I. EQUIPMENT MAINTENANCE AND REPLACEMENT ESTIMATE

Qty	Unit	Service Required	Replacement Interval (Years)	Material Cost	20-Year Total
	AquaSBR				
2	AquaCam-D	Motor Grease	1	$4	$160
2	AquaCam-D	Replace Actuator, Capacitor, Limit Switch	5	$1,200	$9,600
2	D.O. Sensors	Replace Sensor Head	2	$224	$4,480
2	Sludge Pump	Repair Kit	5	$589	$4,712
	Post-Equalization				
2	Transfer Pump	Repair Kit	5	$589	$4,712
	Controls				
1	Controller	Replace Relays, Switches, Fuses	1	$50	$1,000
1	Controller	Replace Microprocessor Battery	3	$26	$156

INTERVAL TOTALS:

1-Year	2-Year	3-Year	5-Year	7-Year
$58	$448	$26	$4,756	-

20-Year Estimated Total: $24,820

II. LABOR REQUIREMENTS ESTIMATE

Estimated General Operation & Maintenance **

6.0 = Man Hours/week for Process Testing

2.0 = Man Hours/week for General Plant Cleanup and Routine Maintenance

III. POWER CONSUMPTION ESTIMATE

Power Costs of All Equipment as Proposed *

AquaSBR	383	(kWh/day)
Post-Equalization	3	(kWh/day)
Total:	386	(kWh/day)
Estimated $/kWh:	$0.08	
Total Annual Power Cost:	$11,261	

20-Year Estimated Power Cost: $225,220

© 2021 Aqua-Aerobic Systems, Inc. CONFIDENTIAL

OMNIFLO® SEQUENCING BATCH REACTOR (SBR) JET TECH SBR TECHNOLOGY

PROVEN PERFORMANCE UNDER DEMANDING CONDITIONS

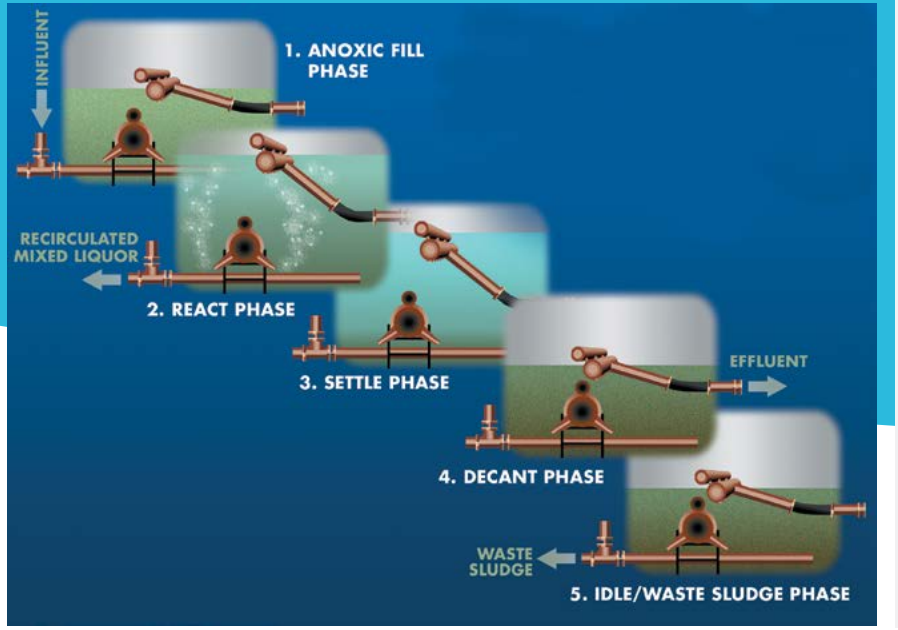

The OMNIFLO® SBR Cycle effectively utilizes a single reactor

OMNIFLO® SBR Benefits

- Biological Nutrient Removal (BNR)
- High quality effluent at widely varying flows and loadings
- No sludge recycle system
- Perfect quiescent settling
- Optimum energy efficiency
- No clarifiers
- No short circuiting
- Small footprint
- Flexible design
- Retrofits of existing tanks
- Biological phosphorous removal

SUPERIOR TECHNOLOGY IN WASTEWATER TREATMENT

The OMNIFLO® Sequencing Batch Reactor (SBR) utilizes state-of-the-art equipment and controls to deliver superior performance under the most demanding conditions, while offering important benefits to plant owners and operators.

Operating Principals

The OMNIFLO SBR is a fill-and-draw, non-steady state activated sludge process in which one or more reactor basins are filled with wastewater during a discrete time period, and then operated in a batch treatment mode. In a single reactor basin the OMNIFLO SBR accomplishes equalization, aeration, and clarification in a timed sequence. In a conventional continuous flow process, multiple structures are required to obtain the same treatment objectives.

A single cycle for each reactor consists of five discrete periods, Fill, React, Settle, Decant, and Idle. The OMNIFLO SBR system is unique in its ability to handle influent flows and a wide range of organic loads and industrial pollutants. The OMNIFLO SBR is ideally suited when nitrification, denitrification and biological phosphorous removal are necessary.

The operating strategy provides process control over a wide range of flows. By varying the operating strategy, aerobic or anoxic conditions can be achieved to encourage the growth of desirable microorganisms. Microorganisms can also be acclimated to a wide range of industrial and chemical processing wastes.

OMNIFLO® SBR Cycle

Anoxic Fill Phase

During Anoxic fill influent is distributed throughout the settled sludge through the Influent Distribution/Sludge Collection Manifold (ID/SC) and biodegration is initiated. The reactor is filled with wastewater and fill can be aerated, anoxic, or a combination of aerated and anoxic.

React Phase

Influent flow is terminated. Aeration and mixing continue in the full reactor until complete biodegration is achieved.

Settle Phase

Aeration and mixing are turned off and perfect quiescent conditions allow the biomass to settle, leaving the treated supernatant above.

Decant Phase

Effluent is removed from just below the liquid surface by the Floating Solids Excluding Decanter.

Idle/Waste Sludge Phase

The reactor waits to receive flow. Settled sludge is drawn through the ID/SC and removed from the SBR reactor.

These types of state-of-the-art control strateies meet specific needs.

OMNIFLO® SBR Control Features

- Reduction of operator time (fully automated)
- Consistent, efficient process
- Additional PC/SCADA systems (optional)
- Equipment failure alarms and automated responses
- Phone modem for remote process service capability (standard)
- Continuous liquid level indication (standard on flow proportional)
- D.O. control (optional)
- Surge protection
- Flexibility for operator to change set points

OMNIFLO® SBR System Controls

The heart of the OMNIFLO® SBR is the control system. The control system focuses on an operating strategy that optimizes the SBR process capabilities while minimizing required operator time and decision making. We currently offer three types of control systems:

Flow Proportional Control – This state-of-the-art control system features a PLC with a simple to use operator interface. Pressure transducers are used to continuously monitor the rate of fill in each SBR reactor. As the flow changes, the aeration time is adjusted proportional to the flow. This strategy ensures that oxygen is available when needed, but does not waste power during low flow periods. The flow proportional control system also provides automatic alarm and failure response. For example, if an influent valve fails to open, the influent pump station would be pumping against a closed valve. This feature would place the affected reactor out of service and divert the flow to another in-service basin until the failure is manually acknowledged and corrected. The controls adjust the operating strategy and setpoints to provide optimal treatment with the remaining reactors.

Slug Feed Control – The slug feed control strategy utilizes intermittent, rapid fill periods, which maximizes available aeration time during each cycle. This PLC based control system is applicable for treatment plants that have adequate influent holding capacity (influent equalization basin) prior to the SBR.

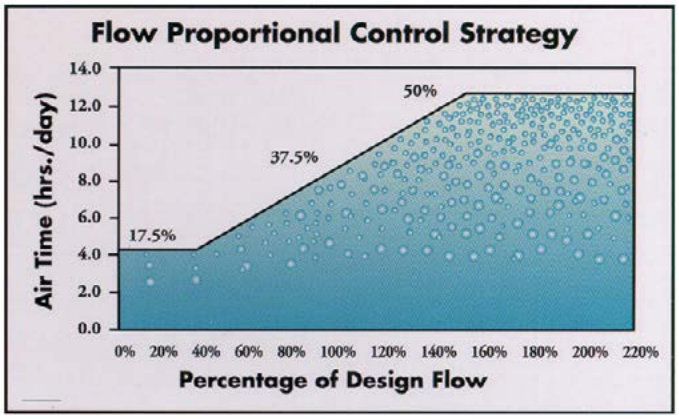

Aeration time is adjusted proportionally to flow to ensure the right amount of oxygen is available when needed.

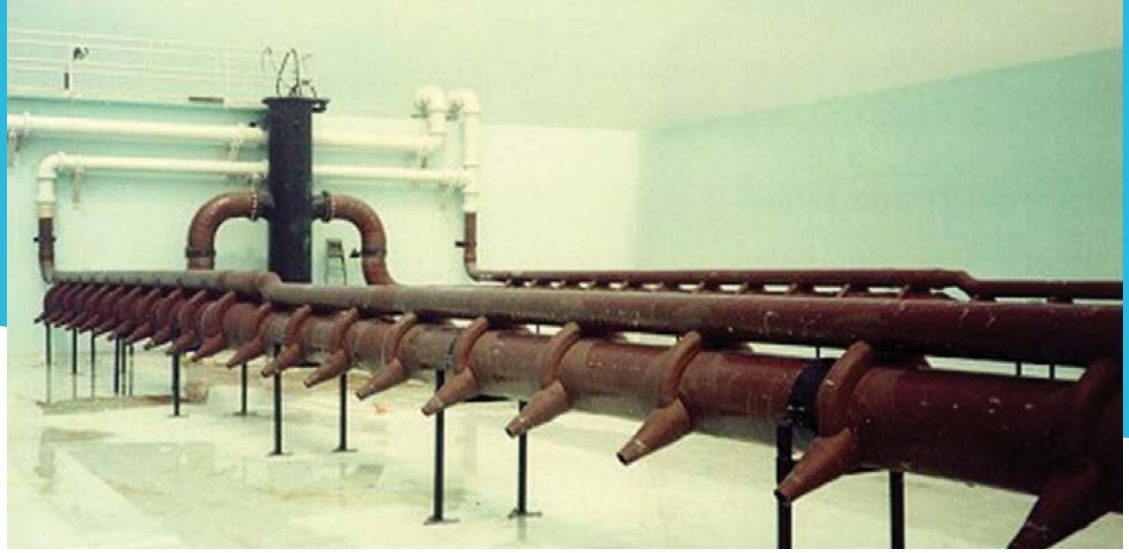

VARI-CANT® Jet Aeration System

SUPERIOR EQUIPMENT FOR PROCESS PERFORMANCE

Jet Aeration Desgns

The VARI-CANT® jet aeration system from Evoqua utilizes proven principles of jet aeration, combined with state-of-the-art design and materials, resulting in a system with superior performance, efficiency and trouble-free operation. The jet aeration system operates by intermixing air with a motive liquid and injecting the stream into the wastewater. The motive liquid – recirculated mixed liquor – is discharged from an inner nozzle into an outer nozzle. Compressed atmospheric air is introduced, and sheared into tiny bubbles which are entrained in the motive liquid stream and injected back into the basin.

Diffused Aeration Designs

We offer both fine and coarse bubble SBR installations with fixed and retrievable diffuser assemblies available. Most fine and coarse bubble designs used in SBR's require some sort of mixing device to achieve complete mix in the basin during aeration. OMNIFLO® SBR systems are designed without a mixing device when the density of the diffusers achieve full floor coverage and the ID/SC manifold is used to distribute the influent evenly across the basin floor. Reliable and durable floating surface aerators and mixers are also available for special applications with SBR technology.

AERATION/ MIXING OPTIONS

- Jets with submersible or dry pit pumps
- Full floor coverage with fine & coarse bubble diffusers
- High-speed floating aerators
- Fixed fine and coarse bubble diffusers with mixers
- Mixers
- Retrievable fine and coarse bubble diffusers with mixers

OMNIFLO® SBR with Fine Bubble Diffusers

OMNIFLO® SBR with Fine Bubble Diffusers

Influent distribution manifold

Influent Distribution/ Sludge Collection Manifold (ID/SC)

The ID/SC manifold allows intimate contact of the influent (food) with the settled biomass in the sludge blanket throughout the length of the basin. During this time, the soluble BOD is absorbed and stored by the facultative biomass until air is received to metabolize the food. The selective pressures exerted on the biomass assists in good settling and facultative organisms to predominate. The ID/SC manifold is also used to withdraw sludge from multiple points across the basin floor. This yields the thickest sludge possible, reducing side stream sludge treatment operation and maintenance. Finally, the ID/SC prevents disruption of the sludge blanket during Filled Decant periods necessitated by high flow rates or emergency single tank operation.

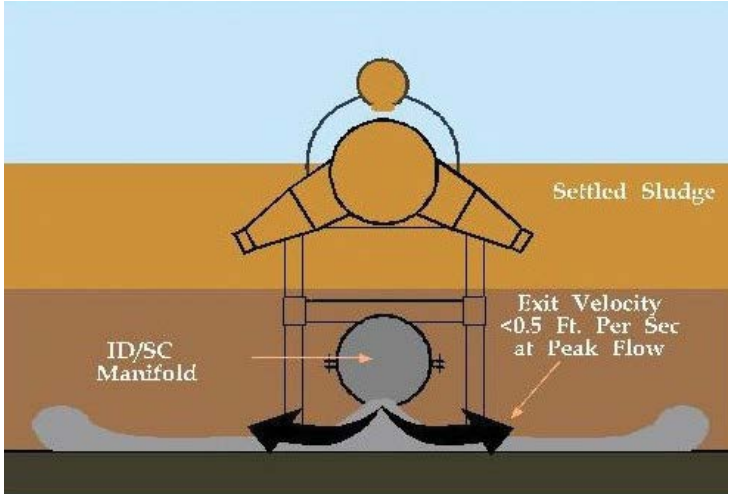

OMNIFLO® SBR KEY ADVANTAGES

- Licensed plant operators available for customer service 24 hrs/day, 7 days/week
- Choice of aeration / mixing devices
- Influent distribution / sludge collection manifold (ID/SC)
- Non-Electro mechanical solids excluding floating decanter
- State-of-the-art controls
- Retrofits available for any basin geometry
- Experience, Reputation, & Reliability

Floating solids excluding decanter

Draw tube with solids excluding plug valves.

Floating Solids Excluding Decanter

The Jet Tech™ floating solids excluding decanter is the only true solids excluding decanter in the industry that does not utilize electro-mechanical equipment in the basin. This state-of-the-art design utilizes multiple orifices to keep velocities at a minimum, and pulls treated effluent from below the surface to eliminate the possibility of entraining floatables. The decanters are constructed of high quality, durable, corrosive resistant materials with a manual override that is unique in the industry and requires no routine maintenance.

Fixed Decanter

The fixed decanter operates similarly to the floating decanter, except it is attached to the basin wall at a fixed elevation below the bottom water level. This eliminates the flexible hose connector, knee brace and decanter rest support. In SBR systems, the fixed decanter requires the availability of a longer settling time since the solids must settle below the bottom water level before decanting.

Non Solids Excluding Decanter

The non solids excluding decanter is constructed similarly to the solids excluding decanter, however it does not contain the spring loaded valves. This type of decanter is installed in applications when it is not important if some solids are left in the decanted effluent.

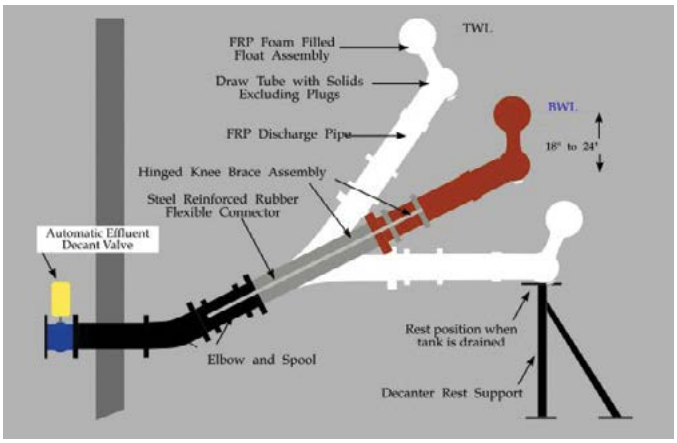

Jet Tech™ decanters are unique in the industry and require no routine maintenance.

DECANTER ADVANTAGES

- Innovative designs, engineered specifically for each project.
- Simple safe operation
- No in-basin electromechanical devices requiring maintenance
- Consistent quality performance
- Years of reliable operating experience in the field with installations worldwide

The 2.4 MGD Pima Utility Wastewater Treatment Plant meets Title 22 effluent quality standards.

PROVEN TECHNOLOGY AND EXPERIENCE

Pima Utility

The Pima Utility Wastewater Treatment Plant located in a retirement community in Arizona was designed to treat 2.4 million gallons per day (MGD), and produce a high quality effluent with disinfection, low turbidity and nitrogen levels to meet Title 22 effluent quality standards. The rectangular process basins were designed to be low profile and covered for environmental aesthetics with mechanical equipment installed in an enclosed building to eliminate any noise.

Rahr Malting

The Rahr Malting Company located in Shakopee, MN is one of the world's largest malt producers. Since 1999, an OMNIFLO® SBR has been installed which has consistently met their wastewater treatment requirements. The Rahr Malting Co., also worked with the Minnesota Pollution Control Agency in cleaning up the river where the wastewater effluent is discharged to make sure oxygen consuming compounds were removed.

Fruitland, Maryland

The City of Fruitland, Maryland installed an OMNIFLO® SBR system to expand its capacity of its wastewater treatment plant and to meet the requirements for the Chesapeake Bay initiative. The OMNIFLO SBR system was selected because of its compact footprint and ability to achieve enhanced nutrient removal within a two-tank layout. This system also includes the patented VARI-CANT® Jet Aeration system from Evoqua as well.

OMNIFLO® SBR PRIMARY MARKETS

- Municipal
- Food & Beverage
- Pulp & Paper
- Petrochemical & Oil Refining
- Pharmaceutical
- Chemical / CPI
- Landfill /Leachate Applications
- Textile Industry

OMNIFLO® SBR installed at Rahr Malting

Fruitland, Maryland Wastewater Treatment Plant

Visit www.evoqua.com/omniflo to connect with an expert.

2607 N. Grandview Blvd, Suite 130, Waukesha, Wisconsin 53188

+1 (866) 926-8420 (toll-free) **+1 (978) 614-7233** (toll) **www.evoqua.com**

Jet Tech, OMNIFLO and VARI-CANT are trademarks of Evoqua, its subsidiaries or affiliates, in some countries. Equipment and features described are protected under U.S. Patents 6,244,574; 6,464,211; 7,243,912; 7,550,076; and 7,655,144.

All information presented herein is believed reliable and in accordance with accepted engineering practices. Evoqua makes no warranties as to the completeness of this information. Users are responsible for evaluating individual product suitability for specific applications. Evoqua assumes no liability whatsoever for any special, indirect or consequential damages arising from the sale, resale or misuse of its products.

© 2014 Evoqua Water Technologies LLC Subject to change without notice BC-SBR-BR-0914

SPECIFICATIONS:

DIMENSIONS:

TANK LENGTH (DIM A):
- 25K SYSTEM = 34 FT (10.4m)
- 50K SYSTEM = 68 FT (20.8m)

TANK WIDTH (DIM B):
- 25K SYSTEM = 14 FT (4.3m)
- 50K SYSTEM = 14 FT (4.3m)

TANK HEIGHT (DIM C):
- 25K SYSTEM = 12 FT (3.7m)
- 50K SYSTEM = 12 FT (3.7m)

OPERATING PARAMETERS:

HIGH WATER LEVEL (H.W.L.) = 11.5 FT (3.5m)
TOP WATER LEVEL (T.W.L.) (DIM D) = 10.5 FT (3.2m)
BOTTOM WATER LEVEL (B.W.L.) (DIM E) = 8.75 FT (2.7m)

WEIGHTS: (EXCLUDING BLOWER SKID AND PIPING)

DRY WEIGHT: 25K = 22,350 lbs (10138 kg), 50K = 43,800 lbs (19867 kg)

OPERATING WEIGHT: 25K = 353,740 lbs (160454 kg), 50K = 716,320 lbs (324917 kg)

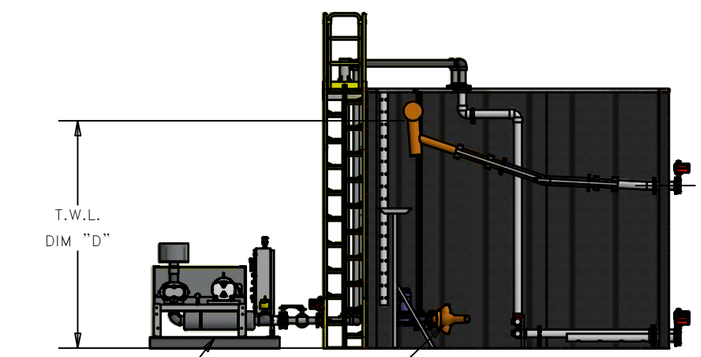

SECTION A–A
(TOP WATER LEVEL)

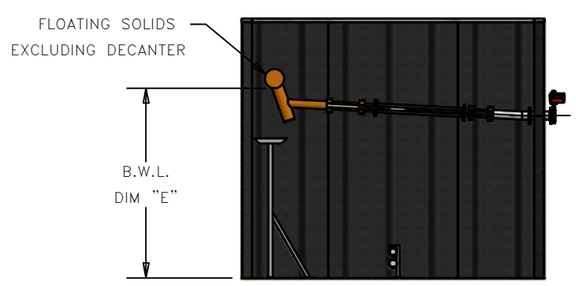

SECTION C–C
(BOTTOM WATER LEVEL)

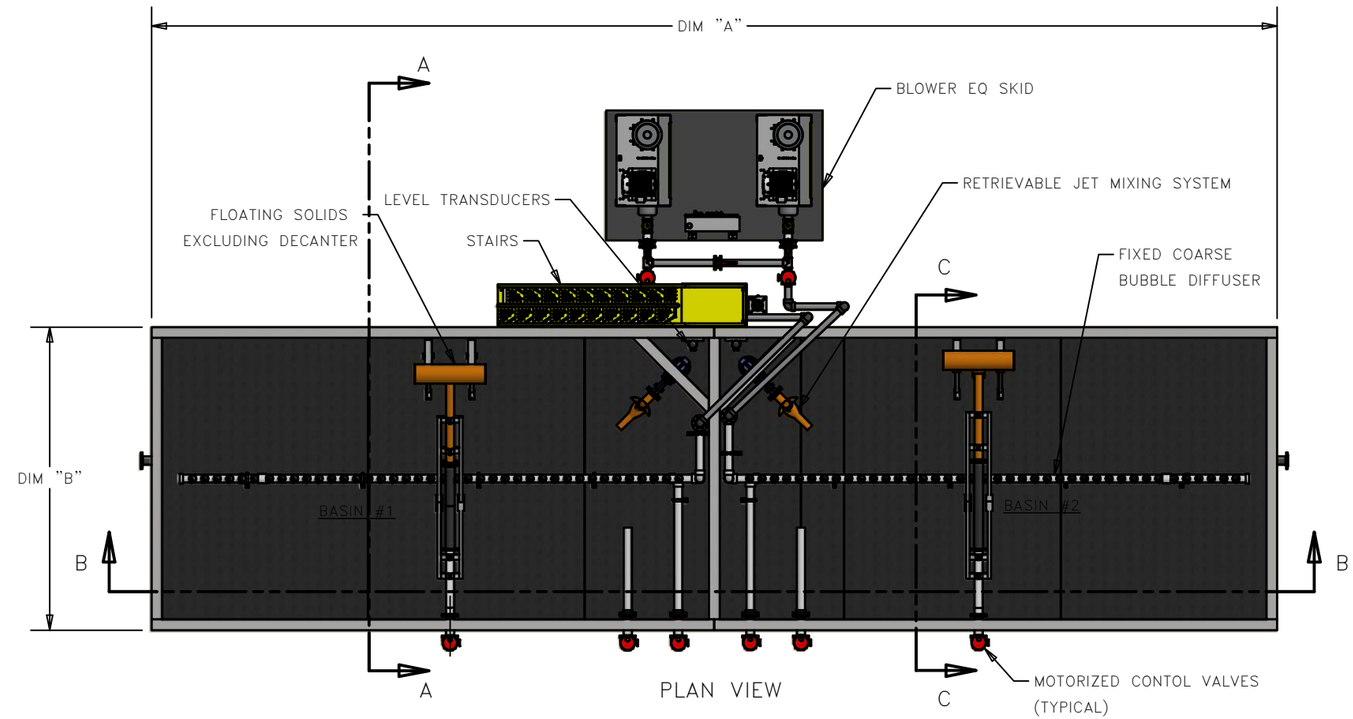

PLAN VIEW

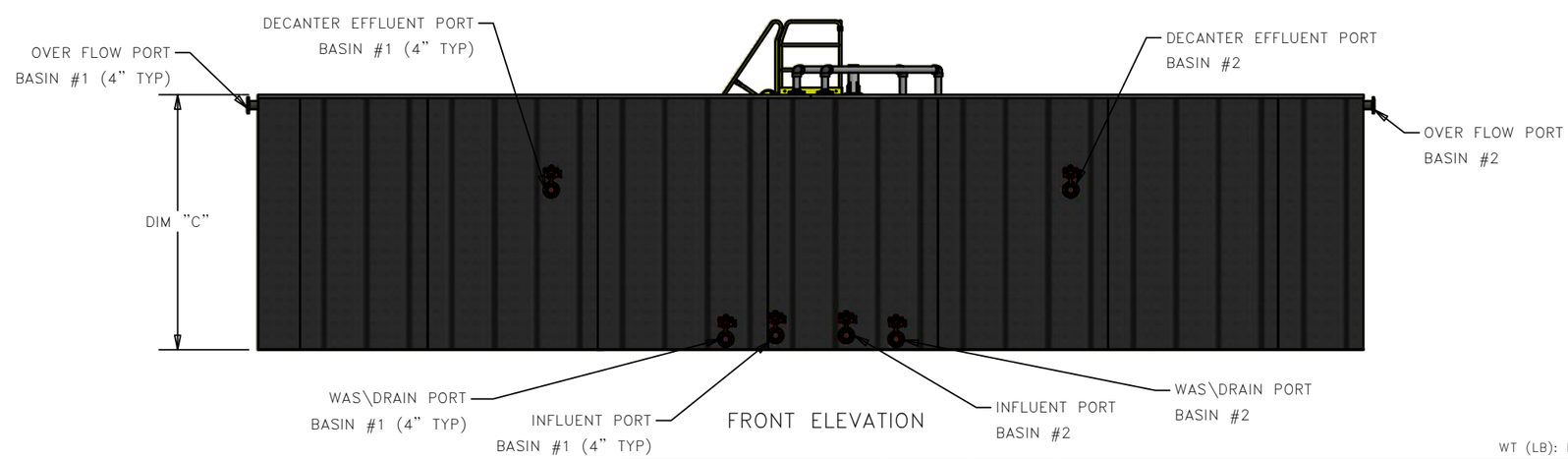

FRONT ELEVATION

WT (LB): N/A

DIMENSIONS IN INCHES UNLESS SPECIFIED	
TOLERANCES UNLESS OTHERWISE SPECIFIED	
TWO (2) PLACE DEC.	±.06
THREE (3) PLACE DEC.	±.005
ANGULAR	±.50
STRUCTURAL DIMENSIONS	±1/16
MACHINED SURFACES	250

REV	DESCRIPTION	DATE	APPROVED	ECN

REVISION HISTORY

COMPANY CONFIDENTIAL
THIS DOCUMENT AND ALL INFORMATION CONTAINED HEREIN ARE THE PROPERTY OF EVOQUA AND/OR ITS AFFILIATES. THE DESIGN CONCEPTS AND INFORMATION CONTAINED HEREIN ARE PROPRIETARY TO EVOQUA AND ARE SUBMITTED IN CONFIDENCE. THEY ARE NOT TRANSFERABLE AND MUST BE USED ONLY FOR THE PURPOSE FOR WHICH THE DOCUMENT IS EXPRESSLY LOANED. THEY MUST NOT BE DISCLOSED, REPRODUCED, LOANED OR USED IN ANY OTHER MANNER WITHOUT THE EXPRESS WRITTEN CONSENT OF EVOQUA. IN NO EVENT SHALL THEY BE USED IN ANY MANNER DETRIMENTAL TO THE INTEREST OF EVOQUA. ALL PATENT RIGHTS ARE RESERVED. UPON THE DEMAND OF EVOQUA, THIS DOCUMENT, ALONG WITH ALL COPIES AND EXTRACTS, AND ALL RELATED NOTES AND ANALYSES, MUST BE RETURNED TO EVOQUA OR DESTROYED, AS INSTRUCTED BY EVOQUA. ACCEPTANCE OF THIS DELIVERY OF THIS DOCUMENT CONSTITUTES AGREEMENT TO THESE TERMS AND CONDITIONS.

DESIGNER	J.Addison	DATE	3/30/2017
CHECKER		DATE	
ENGINEER		DATE	3/30/2017
MANAGER	R.B.	DATE	
FILE:		UPDATE:	
SCALE:		SIZE:	B

TITLE: OMNIFLO SBR GENERAL ARRANGEMENT

CLIENT:

EVOQUA WATER TECHNOLOGIES
WATER TECHNOLOGIES
Thomasville, GA
1-800-841-1550

PROJECT	CODE	DRAWING	SHEET	REV
		OMNI–GA	1 OF 3	

REF:SBR50K_GA Layout.iam

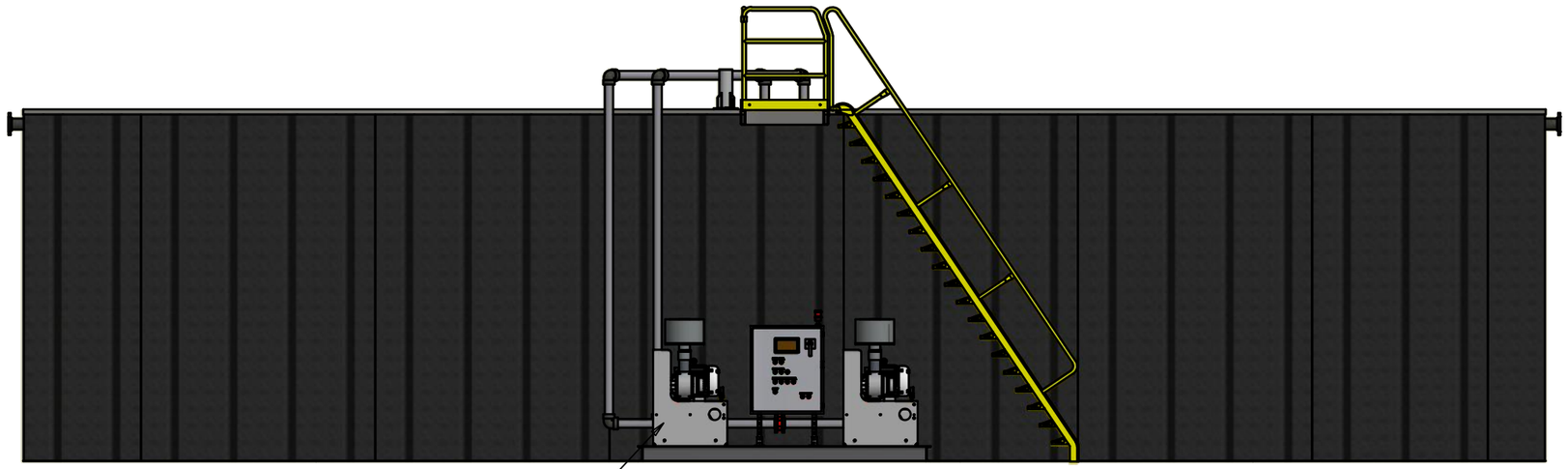

REAR ELEVATION

SECTION B–B

WT (LB): N/A

DIMENSIONS IN INCHES UNLESS SPECIFIED	
TOLERANCES UNLESS OTHERWISE SPECIFIED	
TWO (2) PLACE DEC.	±.06
THREE (3) PLACE DEC.	±.005
ANGULAR	±.50
STRUCTURAL DIMENSIONS	±1/16
MACHINED SURFACES	250

COMPANY CONFIDENTIAL
THIS DOCUMENT AND ALL INFORMATION CONTAINED HEREIN ARE THE PROPERTY OF EVOQUA AND/OR ITS AFFILIATES. THE DESIGN CONCEPTS AND INFORMATION CONTAINED HEREIN ARE PROPRIETARY TO EVOQUA AND ARE SUBMITTED IN CONFIDENCE. THEY ARE NOT TRANSFERABLE AND MUST BE USED ONLY FOR THE PURPOSE FOR WHICH THE DOCUMENT IS EXPRESSLY LOANED. THEY MUST NOT BE DISCLOSED, REPRODUCED, LOANED OR USED IN ANY OTHER MANNER WITHOUT THE EXPRESS WRITTEN CONSENT OF EVOQUA. IN NO EVENT SHALL THEY BE USED IN ANY MANNER DETRIMENTAL TO THE INTEREST OF EVOQUA. ALL PATENT RIGHTS ARE RESERVED. UPON THE DEMAND OF EVOQUA, THIS DOCUMENT, ALONG WITH ALL COPIES AND EXTRACTS, AND ALL RELATED NOTES AND ANALYSES, MUST BE RETURNED TO EVOQUA OR DESTROYED, AS INSTRUCTED BY EVOQUA. ACCEPTANCE OF THIS DELIVERY OF THIS DOCUMENT CONSTITUTES AGREEMENT TO THESE TERMS AND CONDITIONS.

DESIGNER J.Addison	DATE 3/30/2017	TITLE	OMNIFLO SBR GENERAL ARRANGEMENT
CHECKER	DATE	CLIENT	
ENGINEER	DATE 3/30/2017	EVOQUA WATER TECHNOLOGIES	WATER TECHNOLOGIES Thomasville, GA 1-800-841-1550
MANAGER R.B.	DATE		
FILE:	UPDATE:		
SCALE:	SIZE: B		

PROJECT	CODE	DRAWING	SHEET	REV
		OMNI–GA	2 OF 3	

REF:SBR50K_GA Layout.iam

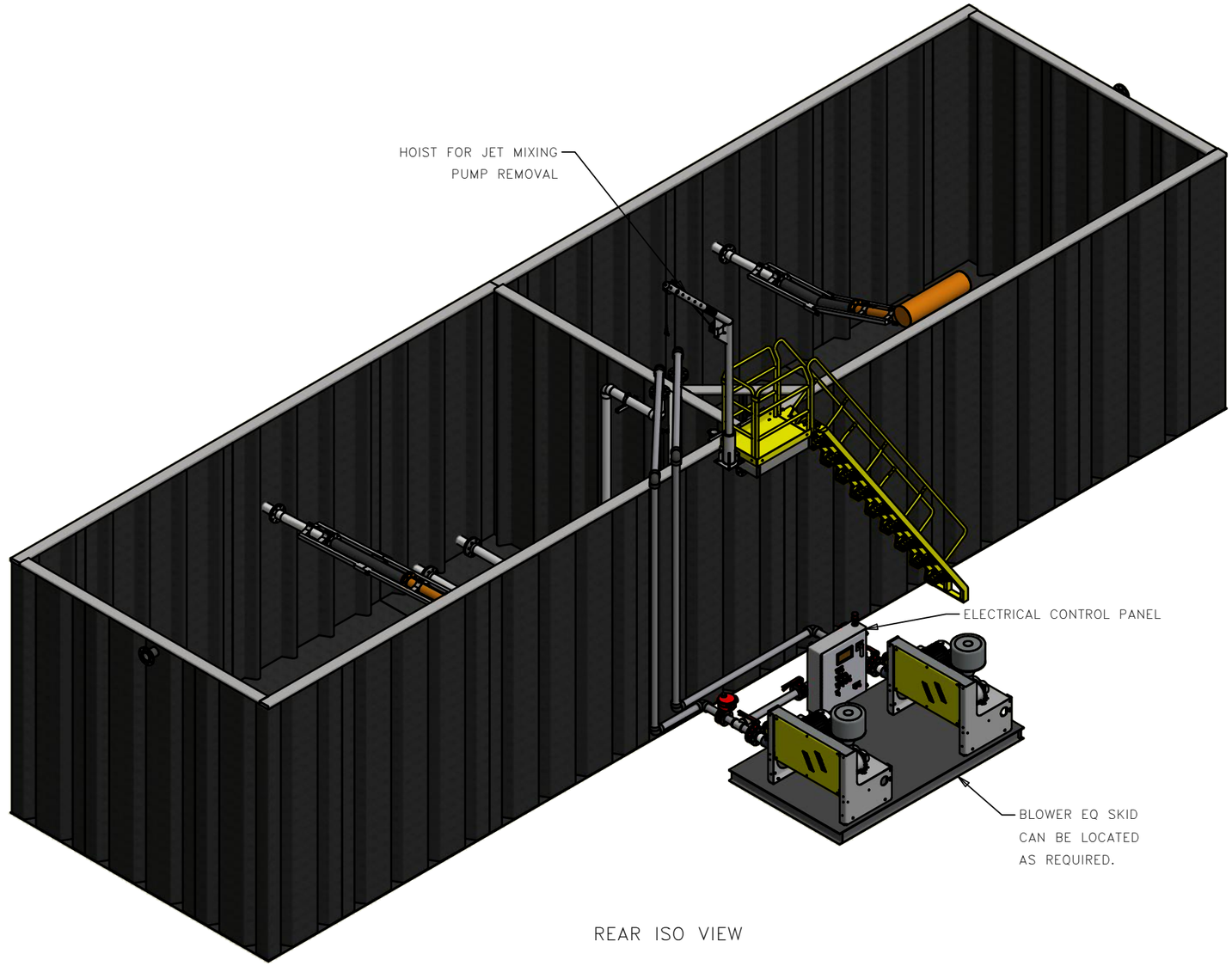

REAR ISO VIEW

WT (LB): N/A

DIMENSIONS IN INCHES UNLESS SPECIFIED	
TOLERANCES UNLESS OTHERWISE SPECIFIED	
TWO (2) PLACE DEC.	±.06
THREE (3) PLACE DEC.	±.005
ANGULAR	±.50
STRUCTURAL DIMENSIONS	±1/16
MACHINED SURFACES	250

COMPANY CONFIDENTIAL
THIS DOCUMENT AND ALL INFORMATION CONTAINED HEREIN ARE THE PROPERTY OF EVOQUA AND/OR ITS AFFILIATES. THE DESIGN CONCEPTS AND INFORMATION CONTAINED HEREIN ARE PROPRIETARY TO EVOQUA AND ARE SUBMITTED IN CONFIDENCE. THEY ARE NOT TRANSFERABLE AND MUST BE USED ONLY FOR THE PURPOSE FOR WHICH THE DOCUMENT IS EXPRESSLY LOANED. THEY MUST NOT BE DISCLOSED, REPRODUCED, LOANED OR USED IN ANY OTHER MANNER WITHOUT THE EXPRESS WRITTEN CONSENT OF EVOQUA. IN NO EVENT SHALL THEY BE USED IN ANY MANNER DETRIMENTAL TO THE INTEREST OF EVOQUA. ALL PATENT RIGHTS ARE RESERVED. UPON THE DEMAND OF EVOQUA, THIS DOCUMENT, ALONG WITH ALL COPIES AND EXTRACTS, AND ALL RELATED NOTES AND ANALYSES, MUST BE RETURNED TO EVOQUA OR DESTROYED, AS INSTRUCTED BY EVOQUA. ACCEPTANCE OF THIS DELIVERY OF THIS DOCUMENT CONSTITUTES AGREEMENT TO THESE TERMS AND CONDITIONS.

DESIGNER	J.Addison	DATE	3/30/2017
CHECKER		DATE	
ENGINEER		DATE	3/30/2017
MANAGER	R.B.	DATE	
FILE:		UPDATE:	
SCALE:		SIZE:	B

TITLE: OMNIFLO SBR GENERAL ARRANGEMENT

CLIENT

EVOQUA WATER TECHNOLOGIES
WATER TECHNOLOGIES
Thomasville, GA
1-800-841-1550

PROJECT	CODE	DRAWING	SHEET	REV
		OMNI–GA	3 OF 3	

REF:SBR50K_GA Layout.iam

Appendix C
NPDES Permit

Commonwealth of Massachusetts
Executive Office of Energy & Environmental Affairs

Department of Environmental Protection

Central Regional Office • 8 New Bond Street, Worcester MA 01606 • 508-792-7650

Charles D. Baker
Governor

Karyn E. Polito
Lieutenant Governor

Kathleen A. Theoharides
Secretary

Martin Suuberg
Commissioner

INDIVIDUAL GROUNDWATER DISCHARGE PERMIT

Name and Address of Applicant:	Town of Bolton 663 Main Street Bolton, MA 01740
Date of Application:	January 27, 2021
Application/Permit No.	833-2
Date of Issuance:	November 10, 2021
Date of Expiration:	November 10, 2026
Effective Date:	November 10, 2021

AUTHORITY FOR ISSUANCE

Pursuant to authority granted by Chapter 21, Sections 26-53 of the Massachusetts General Laws, as amended, 314 CMR 2.00, and 314 CMR 5.00, the Massachusetts Department of Environmental Protection (the Department or MassDEP) hereby issues the following permit to: The Town of Bolton (hereinafter called "the permittee") authorizing discharges to the ground from the on site wastewater treatment facility located at 100 Mechanic Street in Bolton, MA for the Florence-Sawyer and Emerson schools, Public Safety Building, Town Library and Houghton Building, such authorization being expressly conditional on compliance by the permittee with all terms and conditions of the permit hereinafter set forth.

David Boyer

_____ 11/10/2021

David Boyer, P.E. **Date**
Bureau of Water Resources

This information is available in alternate format. Contact Michelle Waters-Ekanem, Director of Diversity/Civil Rights at 617-292-5751.
TTY# MassRelay Service 1-800-439-2370
MassDEP Website: www.mass.gov/dep

Printed on Recycled Paper

I. SPECIAL CONDITIONS

A. Effluent Limits

1) The permittee is authorized to discharge into the ground from the wastewater treatment facilities for which this permit is issued a treated effluent whose characteristics shall not exceed the following values:

Effluent Characteristics	Discharge Limitations
Flow	38,000 gpd
Biochemical Oxygen Demond (BOD_5)	30 mg/l
Total Suspended Solids (TSS)	30 mg/l
Nitrate Nitrogen	10 mg/l
Total Nitrogen (NO_2 + NO_3 + TKN)	10 mg/l
Oil and Grease	15 mg/l

a) The pH of the effluent shall not be less than 6.5 nor greater than 8.5 at any time or not more than 0.2 standard units outside the naturally occurring range.

b) The discharge of the effluent shall not result in any demonstrable adverse effect on the groundwater or violate any water quality standards that have been promulgated.

c) The monthly average concentration of BOD and TSS in the discharge shall not exceed 15 percent of the monthly average concentrations of BOD and TSS in the influent into the permittee's wastewater treatment facility.

d) When the average annual flow exceeds 80 percent of the permitted flow limitations, the permittee shall submit a report to the Department describing what steps the permittee will take in order to remain in compliance with the permit limitations and conditions, inclusive of the flow limitations established in this permit.

B. Monitoring and Reporting

1) The permittee shall monitor and record the quality of the **influent** and the quality and quantity of the **effluent** prior to discharge to the leaching facilities according to the following schedule and other provisions:

INFLUENT:

Parameter	Minimum Frequency of Analysis	Sample Type
BOD_5	Monthly	24 Hr. Composite
TSS	Monthly	24 Hr. Composite
Total Solids	Monthly	24 Hr. Composite
Ammonia Nitrogen	Monthly	24 Hr. Composite

EFFLUENT:

Parameter	Minimum Frequency of Analysis	Sample Type
Flow	Daily	Max-Min-Avg
pH	Daily	Grab
BOD_5	Monthly	24 Hr. Composite
TSS	Monthly	24 Hr. Composite
Nitrate Nitrogen	Monthly	24 Hr. Composite
Total Nitrogen	Monthly	24 Hr. Composite
Oil & Grease	Monthly	Grab
Total Phosphorus	Quarterly	Grab
Orthophosphate	Quarterly	Grab
Volatile Organic Compounds	Annually	Grab

a) After one full year of monitoring the Total Phosphorus and Orthophosphate results, the Department may determine, upon the request of the permittee, that the frequency of monitoring may be reduced if, in the judgment of the Department, the results of the sampling indicate that existing phosphorus levels will not adversely impact downgradient receptors. If the Department reduces the frequency of monitoring for Total Phosphorus and Orthophosphate, the Department reserves the right to resume more frequent monitoring if the Department determines that phosphorus levels are impacting downgradient receptors.

2) The permittee shall monitor, record and report the quality of water in the four (4) monitoring wells, one upgradient (MW# 3) and three (3) downgradient (MW# 4, MW# 5 and MW# 6), of the discharge as stated in the "Mounding Analysis Report for Town of

Bolton" prepared by Tata & Howard and D'Amore Associates revised February 2007 according to the following schedule and other provisions:

Parameter	Minimum Frequency of Analysis
pH	Monthly
Static Water Level	Monthly
Specific Conductance	Monthly
Nitrate Nitrogen	Quarterly
Total Nitrogen	Quarterly
Total Phosphorus	Quarterly
Orthophosphate	Quarterly
Volatile Organic Compounds	Annually

a) Static Water Level shall be expressed as an elevation and shall be referenced to the surveyed datum established for the site. It shall be calculated by subtracting the depth to the water table from the surveyed elevation of the top of the monitoring well's PVC well casing/riser.

b) After one full year of monitoring the Total Phosphorus and Orthophosphate results, the Department may determine, upon the request of the permittee, that the frequency of monitoring may be reduced if, in the judgment of the Department, the results of the sampling indicate that existing phosphorus levels will not adversely impact downgradient receptors. If the Department reduces the frequency of monitoring for Total Phosphorus and Orthophosphate, the Department reserves the right to resume more frequent monitoring if the Department determines that phosphorus levels are impacting downgradient receptors.

3) Any grab sample or composite sample required to be taken less frequently than daily shall be taken during the period of Monday through Friday inclusive. All composite samples shall be taken over the operating day.

4) The permittee shall submit all monitoring reports within 30 days of the last day of the reporting month to MassDEP and to the Nashoba Associated Boards of Health, 30 Central Avenue, Ayer, MA 01432. All discharge monitoring reports submitted to MassDEP must be submitted through eDEP. To register for electronic submission go to: **http://www.mass.gov/eea/agencies/massdep/service/online/edep-online-filing.html**

C. Supplemental Conditions

1) The permittee shall notify the Department at least thirty (30) days in advance of the proposed transfer of ownership of the facility for which this permit is written. Said notification shall include a written agreement between the existing and new permittees containing a specific date for transfer of permit, responsibility, coverage and liability between them.

2) A staffing plan for the facility shall be submitted to the Department once every two years and whenever there are staffing changes. The staffing plan shall include the following components:

   a) The operator(s)'s name(s), operator grade(s) and operator license number(s);
   b) The number of operational days per week;
   c) The number of operational shifts per week;
   d) The number of shifts per day;
   e) The required personnel per shift;
   f) Saturday, Sunday and holiday staff coverage;
   g) Emergency operating personnel

3) The permittee is responsible for the operation and maintenance of all sewers, pump stations, and treatment units for the permitted facility, which shall be operated and maintained under the direction of a properly certified wastewater operator.

4) Operation and maintenance of the proposed facility must be in accordance with 314 CMR 12.00, "Operation and Maintenance and Pretreatment Standards for Wastewater Treatment Works and Indirect Discharges", and, 257 CMR 2.00, "Rules and Regulations for Certification of Operators of Wastewater Treatment Facilities".

   a) The facility has been rated (in accordance with 257 CMR 2.00), to be a Grade 4 facility. Therefore, the permittee shall provide for oversight by a Massachusetts Certified Wastewater Treatment plant operator (Chief Operator) Grade 4 or higher. The permittee will also provide for a backup operator who shall possess at least a valid Grade 3 license.

   b) The date and time of the operator's inspection along with the operator's name and certification shall be recorded in the log book on location at the treatment facility. All daily inspection logs consistent with the O&M Manual requirements shall be kept at the facility for a period of three (3) years.

   c) Records of operation of wastewater treatment facilities or disposal systems required by the Department shall be submitted on forms supplied by the Department or on other forms approved by the Department for such use. Monthly reports shall be

certified by the wastewater treatment plant operator in charge and shall be included in the discharge monitoring reports submitted each month.

5) If the operation and maintenance of the facility is contracted to a private concern, the permittee shall submit a copy of the contract, consistent with what is required by the approved Operation & Maintenance manual and signed only by the contractor, to the appropriate MassDEP Regional Office within thirty (30) days of permit issuance. Along with the contract, a detailed listing of all contract operation obligations of the proposed contractor at other facilities shall also be submitted.

6) Any additional connections to the sewer system, beyond the current two schools (Florence-Sawyer and Emerson), Public Safety Building, Town Library and Houghton Building shall be approved by MassDEP and the local Board of Health prior to the connection.

7) All tests or analytical determinations to determine compliance with permit standards and requirements:

   a) Effluent samples shall be collected, transported and stored in accordance with *Standard Methods for the Examination of Water and Wastewater;*

   b) Monitoring must be conducted according to test procedures approved under 40 CFR Part 136 unless other methods are approved by the Department; and,

   c) Samples shall be analyzed by a Massachusetts Certified laboratory unless otherwise approved by the Department.

8) The permittee shall notify the appropriate MassDEP Regional Office, in writing, within thirty (30) days of the following events:

   a) Any interruption of the treatment system operation, other than routine maintenance.
   b) Final shutdown of the treatment system.

9) The permittee shall contract to have any and all solids and sludges generated by the treatment system for which this permit is issued removed off site by a properly licensed waste hauler for disposal at an EPA/MassDEP approved facility. The name and license number of the hauler along with the quantity of wastes removed and the date(s) of removal shall be reported by the permittee in writing to the appropriate MassDEP Regional Office.

10) By no later than December 31, 2026, the permittee shall complete the following improvements to the WWTF based on the engineering report titled “Wastewater Treatment Facility Evaluation. Emerson & Florence-Sawyer Schools” dated June 2021, prepared by Wright-Pierce (“A” refers to Train A and “B” refers to Train B):

a) Replace membrane permeate and back pulse pumps (P-35-1&2, P-88-1&2)

b) Replace sodium bicarbonate and sodium hypochlorite pumps (P-55 A&B, P-66)

c) Replace denitrification recycle pumps (P-36 A&B)

d) Replace bioreactor air diffusers (aerobic zone, A&B)

e) Replace aeration system feed pump A (P-76A)

f) Replace ultraviolet (UV) disinfection system A (UV-18A)

g) Replace electric baseboard and unit heaters (EUH-1&2, EBB-1)

h) Replace process and membrane blowers (B-87 A&B, B-85-1&2)

i) Replace post anoxic mixer A (MX-36A)

j) Replace the effluent pumps (P-77 A&B)

k) Replace membrane feed pumps (P-34 A&B)

l) Replace membrane system control panel

m) Replace fans within process room (EF-1&2)

n) Replace composite sampler

By no later than December 31, 2026, a report shall be submitted summarizing the status of the improvements mentioned above.

11) At year fifteen (2041) following the 2026 upgrades the permittee shall submit two reports to the Department for its review and approval:

a) An engineering report, prepared by a registered professional engineer, that outlines in sufficient detail what modifications (if any) to the facility or other changes are required to insure that the facility can remain in compliance with its GWDP and other applicable requirements through the next 5 year permit term (2046) and beyond; and

b) A financial plan that contains the cost estimates for implementing the facility modifications or other changes identified in the engineering report, and describes and demonstrates, how and when the permittee will finance the needed facility modifications or other changes.

12) In the event that effluent limits are not met, or the discharge is determined to impair groundwater quality in accordance with 314 CMR 5.16(1), the permittee may be obligated to modify, supplement or replace the permitted treatment process so as to

ensure that the discharge does not impair the ability of the groundwater to act as an actual or potential source of potable water.

13) Pursuant to M.G.L. Chapter 21A, section 18(a), and 310 CMR 4.03, holders of this Permit may be subject to annual compliance assurance fees as assessed each year on July 1st and invoiced by MassDEP. Failure of the Permit holder to pay applicable annual compliance assurance fees shall result in the automatic suspension of the permit by operation of law under the statute. If fee non-payment continues for sixty days or more, MassDEP has the statutory option of revoking the Permit, denying any other pending permit applications filed by the Permit holder or taking other enforcement action. Permit holders are required to notify MassDEP in writing if they wish to relinquish or transfer a permit. Failure to do so will result in the continued assessment of fees.

D. Appeal Rights

During the thirty (30) day period following issuance of this permit, a Notice of Claim for an Adjudicatory Appeal may be sent by any person aggrieved (the "Petitioner") by the issuance to:

Case Administrator
Office of Appeals and Dispute Resolution
Massachusetts Department of Environmental Protection
One Winter Street/2nd Floor
Boston, MA 02108

310 CMR 1.01(6)(b) requires the Notice of Claim to: include sufficient facts to demonstrate aggrieved person status; state the facts which are grounds for the appeal specifically, clearly and concisely; and, state relief sought. The permit shall become or remain effective at the end of the 30 day appeal period unless the person filing the Notice of Claim requests, and is granted, a stay of its terms and conditions. If a permit is modified under 314 CMR 2.10, only the modified terms and conditions may be subject to an Adjudicatory Appeal. All other aspects of the existing permit shall remain in effect during any such Adjudicatory Appeal.

Per 310 CMR 4.06, the hearing request to the Commonwealth will be dismissed if the filing fee is not paid. Unless the Petitioner is exempt or granted a waiver, a valid check payable to the Commonwealth to Massachusetts in the amount of $100.00 must be mailed to:

Commonwealth of Massachusetts
Department of Environmental Protection
P.O. Box 4062
Boston, MA 02211

The filing fee is not required if the Petitioner is a city, town, county, or district of the Commonwealth, federally recognized Indian tribe housing authority effective January 14, 1994, or any municipal housing authority; or, per MGL 161A s. 24, the Massachusetts Bay Transportation Authority. The Department may waive the adjudicatory hearing filing fee for a Petitioner who shows that paying the fee will create an undue financial hardship. A Petitioner seeking a waiver must file, along with the hearing request, an affidavit setting forth the facts believed to support the claim of undue financial hardship.

II. GENERAL PERMIT CONDITIONS

5.16: General Conditions

The following conditions apply to all individual and general permits:

(1) No discharge authorized in the permit shall cause or contribute to a violation of 314 CMR 4.00: *Massachusetts Surface Water Quality Standards*. Upon promulgation of any amended standard, the permit may be modified to comply with such standard in accordance with the procedures in 314 CMR 2.10: *Modification, Suspension, Revocation and Renewal of Permits and General Permit Coverage* and 314 CMR 5.12. Except as otherwise provided in 314 CMR 5.10(3)(c), 5.10(4)(a)2. and 5.10(9), no discharge authorized in the permit shall impair the ability of the ground water to serve as an actual or potential source of potable water. Evidence that a discharge impairs the ability of the ground water to serve as an actual or potential source of potable water includes, without limitation, analysis of samples taken in a downgradient well that demonstrates one or more exceedances of the applicable water quality based effluent limitations set forth in 314 CMR 5.10. In those cases where it is shown that a measured parameter exceeds the applicable water quality based effluent limitations set forth in 314 CMR 5.10 at the upgradient monitoring well, evidence that a discharge impairs the ability of the ground water to serve as an actual or potential source of potable water is deemed to exist if a measured parameter in any downgradient well exceeds the level of that same measured parameter in the upgradient well for the same sampling period. A statistical procedure approved by the Department shall be used to determine when a measured parameter exceeds the allowable level.

(2) Duty to Comply. The permittee shall comply at all times with the terms and conditions of the permit, 314 CMR 5.00, M.G.L. c. 21, §§ 26 through 53, and all applicable state and federal statutes and regulations.

(3) Standards and Prohibitions for Toxic Pollutants. The permittee shall comply with effluent standards or prohibitions established by § 307(a) of the Federal Act, 33 U.S.C. § 1317(a), for toxic pollutants within the time provided in the regulations that establish these standards or prohibitions, even if the permit has not yet been modified to incorporate the requirement.

(4) Proper Operation and Maintenance. The permittee shall at all times properly operate and maintain all facilities and equipment installed or used to achieve compliance with the terms and conditions of the permit, 314 CMR 12.00: *Operation and Maintenance and Pretreatment Standards for Wastewater Treatment Works and Indirect Discharges*, and 257 CMR 2.00: *Certification of Operators of Wastewater Treatment Facilities*. All equipment shall be maintained in an acceptable condition for its intended use.

(5) Duty to Halt or Reduce Activity. Upon reduction, loss, or failure of the treatment facility, the permittee shall, to the extent necessary to maintain compliance with its permit, control production, discharges, or both, until the facility is restored or an alternative method of treatment is provided. A permittee may not raise as a defense in an enforcement action that it

would have been necessary to halt or reduce the permitted activity in order to maintain compliance with the conditions of the permit.

(6) Power Failure. In order to maintain compliance with the effluent limitations and prohibitions of the permit, the permittee shall either:

(a) provide an alternative power source sufficient to operate the wastewater control facilities; or

(b) halt, reduce or otherwise control production or all discharges upon the reduction, loss, or failure of the primary source of power to the wastewater control facilities.

(7) Duty to Mitigate. The permittee shall take all reasonable steps to minimize or prevent any adverse impact on human health or the environment resulting from non-compliance with the permit. Additionally, the permittee shall take all necessary steps to prevent an operational upset of the PWTF or POTW.

(8) Duty to Provide Information. The permittee and any operator of the permitted facility shall furnish to the Department within a reasonable time as specified by the Department any information which the Department may request to determine whether cause exists for modifying, suspending, revoking and reissuing, or terminating the permit, or to determine whether the permittee is complying with the terms and conditions of the permit.

(9) Inspection and Entry. The permittee shall allow the Department or its authorized representatives to:

(a) Enter upon the permittee's premises where a regulated facility or activity is located or conducted, or where records required by the permit are kept;

(b) Have access to and copy, at reasonable times, any records that must be kept under the conditions of the permit;

(c) Inspect at reasonable times any facilities, equipment, practices, or operations regulated or required under the permit; and

(d) Sample or monitor at reasonable times for the purpose of determining compliance with the terms and conditions of the permit.

(9A) The permittee shall physically secure the treatment works and monitoring wells and limit access to the treatment works and monitoring wells only to those personnel required to operate, inspect and maintain the treatment works and to collect samples.

(9B) The permittee shall identify each monitoring well by permanently affixing to the steel protective casing of the well a tag with the identification number listed in the permit.

(10) Monitoring. Samples and measurements taken for the purpose of monitoring shall be representative of the monitored activity. Monitoring must be conducted according to test procedures approved under 40 CFR Part 136 unless other test procedures are specified in the permit.

(11) Recordkeeping. The permittee shall retain records of all monitoring information, including

all calibration and maintenance records and all original strip chart recordings for continuous monitoring instrumentation, copies of all reports required by the permit, and all records of all data used to complete the application for the permit, for a period of at least five years from the date of the sample, measurement, report or application. This period may be extended by request of the Department at any time. Records of monitoring information shall include without limitation:

(a) The date, exact place, and time of sampling or measurements;
(b) The individual(s) who performed the sampling or measurement;
(c) The date(s) analyses were performed;
(d) The individual(s) who performed the analyses;
(e) The analytical techniques or methods used; and
(f) The results of such analyses.

(12) Prohibition of Bypassing. Except as provided in 314 CMR 5.16(13), bypassing is prohibited and the Department may take enforcement action against a permittee for bypassing unless:

(a) The bypass was unavoidable to prevent loss of life, personal injury, or severe property damage;
(b) There were no feasible alternatives to the bypass, such as the use of auxiliary treatment facilities, retention of untreated wastes, or maintenance during normal periods of equipment downtime. This condition is not satisfied if the permittee could have installed adequate backup equipment to prevent a bypass which occurred during normal periods of equipment downtime or preventive maintenance; and
(c) The permittee submitted notice of the bypass to the Department:
1. In the event of an anticipated bypass, at least ten days in advance, if possible; or
2. In the event of an unanticipated bypass, as soon as the permittee has knowledge of the bypass and no later than 24 hours after its first occurrence.

(13) Bypass not Exceeding Limitations. The permittee may allow a bypass to occur which does not cause effluent limitations to be exceeded, but only if necessary for the performance of essential maintenance or to assure efficient operation of treatment facilities.

(14) Permit Actions. The permit may be modified, suspended, or revoked for cause. The filing of a request by the permittee for a permit modification, reissuance, or termination, or a notification of planned changes or anticipated non-compliance does not stay any permit condition.

(15) Duty to Reapply. If the permittee wishes to continue an activity regulated by the permit after the expiration date of the permit, the permittee must apply for and obtain a new permit. The permittee shall submit a new application at least 180 days before the expiration date of the existing permit, unless permission for a later date has been granted by the Department in writing.

(16) Property Rights. The permit does not convey any property rights of any sort or any exclusive privilege.

(17) Other Laws. The issuance of a permit does not authorize any injury to persons or property or invasion of other private rights, nor does it relieve the permittee of its obligation to comply with any other applicable Federal, State, or local law, or regulation.

(18) Oil and Hazardous Substance Liability. Nothing in the permit shall be construed to preclude the institution of any legal action or relieve the permittee of any responsibilities, liabilities, or penalties to which the permittee is or may be subject under § 311 of the Federal Act, 33 U.S.C. § 1321, and M.G.L. c. 21E.

(19) Removed Substances. Solids, sludges, filter backwash, or other pollutants removed in the course of treatment or control of wastewaters shall be disposed in a manner consistent with applicable Federal and State laws and regulations including, but not limited to, the Massachusetts Clean Waters Act, M.G.L. c. 21, §§ 26 through 53, and the Federal Act, 33 U.S.C. § 1251 *et seq.*, the Massachusetts Hazardous Waste Management Act, M.G.L. c. 21C, and the Federal Resource Conservation and Recovery Act, 42 U.S.C. § 6901, *et seq*., 310 CMR 19.000: *Solid Waste Management* and 310 CMR 30.000: *Hazardous Waste*.

(20) Reporting Requirements.

(a) Monitoring Reports. Monitoring results shall be reported on a Discharge Monitoring Report (DMR) at the intervals specified in the permit. If a permittee monitors any pollutant more frequently than required by the permit, the results of this monitoring shall be included in the calculation and reporting of the data submitted in the DMR. Beginning on December 2, 2017, a permittee shall submit all DMRs electronically, using the electronic reporting system designated by the Department. A permittee may seek a waiver of this requirement by submitting a written request for the Department's approval.

(b) Compliance Schedules. Reports of compliance or non-compliance with, or any progress reports on interim and final requirements contained in any compliance schedule in the permit shall be submitted no later than 14 days following each schedule date.

(c) Planned Changes. The permittee shall give notice to the Department as soon as possible of any planned physical alterations or additions to the permitted facility or activity which could significantly change the nature or increase the quantity of pollutants discharged. Unless and until the permit is modified, any new or increased discharge in excess of permit limits or not specifically authorized by the permit constitutes a violation.

(d) Anticipated Non-compliance. The permittee shall give advance notice to the Department of any planned changes in the permitted facility or activity which may result in non-compliance with permit requirements.

(e) 24 Hour Reporting. The permittee shall report any non-compliance which may endanger health or the environment. Any information shall be communicated orally within 24 hours of the time the permittee becomes aware of the circumstances. A

written submission shall also be provided within five days of the time the permittee becomes aware of the circumstances. The written submission shall contain: a description of the non-compliance, including exact dates and times, and if the non-compliance has not been corrected, the anticipated time it is expected to continue; and steps taken or planned to reduce, eliminate, and prevent reoccurrence of the non-compliance. The following shall be included as information which must be reported within 24 hours:

1. Any unanticipated bypass which exceeds any effluent limitation in the permit; and
2. Any violation of a maximum daily discharge limitation for any of the pollutants required by the permit to be reported within 24 hours.

(f) Other Non-compliance. The permittee shall report all instances of non-compliance not reported under 314 CMR 5.16(20)(a), (b), or (e) at the time monitoring reports are submitted. The reports shall contain the information listed in 314 CMR 5.16(20)(e).

(g) Toxics. All manufacturing, commercial, mining, or silvicultural dischargers must notify the Department as soon as they know or have reason to believe:

1. That any activity has occurred, or will occur, that would result in the discharge of any toxic pollutant listed in 314 CMR 3.17: *Appendix B - Toxic Pollutants* not limited by the permit, if that discharge will exceed the highest of the following notification levels:
    a. 100 micrograms per liter (100 ug/l);
    b. 200 micrograms per liter (200 ug/l) for acrolein and acrylonitrile, 500 micrograms per liter (500 ug/l) for 2,4-dinitrophenol, and for 2-methyl-4,6-dinitrophenol, and one milligram per liter (1 mg/l) for antimony;
    c. Five times the maximum concentration value reported for that pollutant in the permit application; or
2. That they have begun or expect to begin to use or manufacture as an intermediate or final product or byproduct any toxic pollutant which was not reported in the permit application.

(h) Indirect Dischargers. All Publicly Owned Treatment Works shall provide adequate notice to the Department of the following:

1. Any new introduction of pollutants into the POTW from an indirect discharger which would be subject to § 301 or § 306 of the Federal Act, 33 U.S.C. § 1311 or 1316, if it were directly discharging those pollutants; and
2. Any substantial change in the volume or character of pollutants being introduced into the POTW by a source introducing pollutants into the POTW at the time of issuance of the permit.

(i) Information. Where a permittee becomes aware that it failed to submit any relevant facts in a permit application, or submitted incorrect information in a permit application or in any report to the Department, it shall promptly submit the relevant facts or correct information.

(j) The permittee shall notify the Department in writing within seven days of any change in contract operators.

(21) Signatory Requirement. All applications, reports, or information submitted to the Department shall be signed and certified in accordance with 314 CMR 5.14 and 5.15.

(22) Severability. The provisions of the permit are severable. If any provision of the permit, or the application of any provision of the permit to any circumstance, is held invalid, the application of such provision to other circumstances, and the remainder of the permit, shall not be affected thereby.

(23) Reopener Clause. The Department reserves the right to make appropriate revisions to the permit to establish any appropriate effluent limitations, schedules of compliance, or other provisions, as authorized by the Massachusetts Clean Waters Act, M.G.L. c. 21, §§ 26 through 53, or the Federal Act, 33 U.S.C. § 1251 *et seq*., to bring all discharges into compliance with these statutes.

(24) Approval of Treatment Works. All discharges and associated treatment works authorized in 314 CMR 5.00 shall remain in compliance with the terms and conditions of the permit. Any modification of the approved treatment works shall require written approval of the Department prior to the construction of the modification.

(25) Transfer of Permits.

(a) RCRA Facilities. Any permit which authorizes the operation of a RCRA facility subject to the requirements of 314 CMR 8.07: *Standards for all other RCRA Facilities* shall be valid only for the person to whom it is issued and may not be transferred.

(b) Transfers by Modification. Except as provided in 314 CMR 5.16(25)(a) and (c), a permit may be transferred by the permittee to a new permittee if the permit has been modified or revoked and reissued in accordance with 314 CMR 5.12(2), or a minor modification is made to identify the new permittee in accordance with 314 CMR 5.12(3) and (4).

(c) Automatic Transfers. For facilities other than Privately Owned Wastewater Treatment Facilities (PWTFs) that treat at least some sewage from residential uses, hospitals, nursing or personal care facilities, residential care facilities, or assisted living facilities, PWTFs that have been required to establish, fund and maintain financial assurance mechanism(s) pursuant to 314 CMR 5.15(6), and RCRA facilities subject to the requirements of 314 CMR 8.07: *Standards for all other RCRA Facilities*, a permit may be automatically transferred in accordance with 314 CMR 5.12(5).

(26) Permit Compliance Fees and Inspection Information. Except as otherwise provided, any permittee required to obtain a ground water discharge permit pursuant to M.G.L. c. 21, § 43, and 314 CMR 5.00 shall submit the annual compliance assurance fee established in accordance with M.G.L. c. 21A, § 18 and 310 CMR 4.00: *Timely Action Schedule and Fee Provisions*, as provided in 314 CMR 2.12: *Applications, Fees and Inspection Information*. The requirement to submit the annual compliance fee does not apply to any local government unit other than an authority. Any permittee required to obtain a ground water discharge permit pursuant to M.G.L. c. 21, § 43 and 314 CMR 5.00, may be required to submit inspection information annually, as provided in 314 CMR 2.12.

Massachusetts Department of Environmental Protection
One Winter Street, Boston MA 02108 • Phone: 617-292-5751
Communication For Non-English Speaking Parties - 310 CMR 1.03(5)(a)

1 English:

This document is important and should be translated immediately. If you need this document translated, please contact MassDEP's Diversity Director at the telephone numbers listed below.

2 Español (Spanish):

Este documento es importante y debe ser traducido inmediatamente. Si necesita este documento traducido, por favor póngase en contacto con el Director de Diversidad MassDEP a los números de teléfono que aparecen más abajo.

3 Português (Portuguese):

Este documento é importante e deve ser traduzida imediatamente. Se você precisa deste documento traduzido, por favor, entre em contato com Diretor de Diversidade da MassDEP para os números de telefone listados abaixo.

4(a) 中國（傳統）(Chinese (Traditional):

本文件非常重要，應立即翻譯。如果您需要翻譯這份文件，請用下面列出的電話號碼與Mass DEP的多樣性總監聯繫。

4(b) 中国（简体中文）(Chinese (Simplified):

本文件非常重要，应立即翻译。如果您需要翻译这份文件，请用下面列出的电话号码与Mass DEP的多样性总监联系。

5 Ayisyen (franse kreyòl) (Haitian) (French Creole):

Dokiman sa-a se yon bagay enpòtan epi yo ta dwe tradui imedyatman. Si ou bezwen dokiman sa a tradui, tanpri kontakte Divèsite Direktè MassDEP a nan nimewo telefòn ki nan lis pi ba a.

6 Việt (Vietnamese):

Tài liệu này là rất quan trọng và cần được dịch ngay lập tức. Nếu bạn cần dịch tài liệu này, xin vui

lòng liên hệ với Giám đốc MassDEP đa dạng tại các số điện thoại được liệt kê dưới đây.

7 ប្រទេសកម្ពុជា (Kmer (Cambodian):

ឯកសារនេះគឺមានសារៈសំខាន់និងគួរត្រូវបានបកប្រែភ្លាម។ ប្រសិនបើអ្នកត្រូវបានបកប្រែ ឯកសារនេះសូមទំនាក់ទំនងឯកោតជានាយក MassDEP នៅលេខទូរស័ព្ទដែលបានរាយខាងក្រោម។

8 Kriolu Kabuverdianu (Cape Verdean):

Es documento é importante e deve ser traduzido imidiatamente. Se bo precisa des documento traduzido, por favor contacta Director de Diversidade na MassDEP's pa es numero indicode li d'boche.

9 Русский язык (Russian):

Этот документ является важным и должно быть переведено сразу. Если вам нужен этот документ переведенный, пожалуйста, свяжитесь с директором разнообразия MassDEP по адресу телефонных номеров, указанных ниже.

10 العربية (Arabic):

هذه الوثيقة الهامة وينبغي أن تترجم على الفور. اذا كنت بحاجة الى هذه الوثيقة المترجمة، يرجى الاتصال مدير التنوع في PMassDEعلى أرقام الهواتف المدرجة أدناه.

11 한국어 (Korean):

이 문서는 중요하고 즉시 번역해야합니다. 당신이 번역이 문서가 필요하면 아래의 전화 번호로 MassDEP의 다양성 감독에 문의하시기 바랍니다.

12 հայերեն (Armenian):

Այս փաստաթուղթը շատ կարեւոր է եւ պետք է թարգմանել անմիջապես. Եթե Ձեզ անհրաժեշտ է այս փաստաթուղթը թարգմանվել դիմել MassDEP բազմազանությունը տնօրեն է հեռախոսահամարների թվարկված են ստորեւ.

13 فارسی (Farsi (Persian):

این سند مهم است و باید فورا ترجمه شده است.

اگر شما نیاز به این سند ترجمه شده، لطفا با ما تماس تنوع مدیر PMassDE در شماره تلفن های ذکر شده در زیر.

14 Français (French):

Ce document est important et devrait être traduit immédiatement. Si vous avez besoin de ce document traduit, s'il vous plaît communiquer avec le directeur de la diversité MassDEP aux numéros de téléphone indiqués ci-dessous.

15 Deutsch (German):

Dieses Dokument ist wichtig und sollte sofort übersetzt werden. Wenn Sie dieses Dokument übersetzt benötigen, wenden Sie sich bitte Diversity Director MassDEP die in den unten aufgeführten Telefonnummern.

16 Ελληνική (Greek):

Το έγγραφο αυτό είναι σημαντικό και θα πρέπει να μεταφραστούν αμέσως. Αν χρειάζεστε αυτό το έγγραφο μεταφράζεται, παρακαλούμε επικοινωνήστε Diversity Director MassDEP κατά τους αριθμούς τηλεφώνου που αναγράφεται πιο κάτω.

17 Italiano (Italian):

Questo documento è importante e dovrebbe essere tradotto immediatamente. Se avete bisogno di questo documento tradotto, si prega di contattare la diversità Direttore di MassDEP ai numeri di telefono elencati di seguito.

18 Język Polski (Polish):

Dokument ten jest ważny i powinien być natychmiast przetłumaczone. Jeśli potrzebujesz tego dokumentu tłumaczone, prosimy o kontakt z Dyrektorem MassDEP w różnorodności na numery telefonów wymienionych poniżej.

19 हिन्दी **(Hindi):**

यह दस्तावेज महत्वपूर्ण है और तुरंत अनुवाद किया जाना चाहिए. आप अनुवाद इस दस्तावेज़ की जरूरत है, नीचे सूचीबद्ध फोन नंबरों पर MassDEP की विविधता निदेशक से संपर्क करें.

WRIGHT-PIERCE
Engineering a Better Environment

600 Federal Street, Suite 2151
Andover, MA 01810
978.416.8000 | www.wright-pierce.com

kevin.olson@wright-pierce.com